L818F自動切線型規格件表/CONVERSION CHART

MODEL 機 型	SUB-CLASS 規 格	OPERATING PANEL 操作盒	NEEDLE PLATE 針 板	FEED DOG 送 具	PRESSER FOOT 押 具	HOOK ASM 梭 頭	BOBBIN CASE ASM 梭 殼	BOBBIN 梭 子	NEEDLE 針 號	HAND WHEEL 皮帶輪
L818F-L1-00 ~ L818F-L1-03	薄布料 / light weight material	LA55F-A	E701	D701	P721	G121	G202	G303	DAX1#9	GLH01-A1
L818F-L1-00A ~ L818F-L1-03A			E701	D701	P721	G121	G202	G303	DAX1#9	GLH01Q-E
L818F-L1-10 ~ L818F-L1-13		H L600	E701	D701	P721	G121	G202	G303	DAX1#9	GLH01-A1
L818F-M1-00 ~ L818F-M1-03	薄中布至厚布料 / from light weight material to heavy wei--ght material	LA55F-A	E704	D701	P701	G121	G202	G303	DBX1#14	GLH01-A1
L818F-M1-00A ~ L818F-M1-03A			E704	D701	P701	G121	G202	G303	DBX1#14	GLH01Q-E
L818F-M1A-00 (L818F-M1C-00) ~ ~ L818F-M1A-03 (L818F-M1C-03)			E704D	D702	P701	G121	G202	G303	DBX1#14	GLH01-A1
L818F-M1A-00A (L818F-M1C-00A) ~ ~ L818F-M1A-03A (L818F-M1C-03A)			E704D	D702	P701	G121	G202	G303	DBX1#14	GLH01Q-E
L818F-M1-10 ~ L818F-M1-13		H L600	E704	D701	P701	G121	G202	G303	DBX1#14	GLH01-A1
L818F-M1A-10 (L818F-M1C-10) ~ ~ L818F-M1A-13 (L818F-M1C-13)		H L600	E704D	D702	P701	G121	G202	G303	DBX1#14	GLH01-A1

09.08.28

L818F自動切線型規格件表/CONVERSION CHART

MODEL 機 型	SUB-CLASS 規 格	OPERATING PANEL 操作盒	NEEDLE PLATE 針 板	FEED DOG 送 具	PRESSER FOOT 押 具	HOOK ASM 梭 頭	BOBBIN CASE ASM 梭 殼	BOBBIN 梭 子	NEEDLE 針 號	HAND WHEEL 皮帶輪
L818F-HM1-00 ~ L818F-HM1-03	薄中布至厚布料 / from light weight material to heavy wei--ght material	LA55F-A	E704	D701	P701	G121	G202	G303	DBX1#14	GLH01-A1
L818F-HM1A-00 ~ L818F-HM1A-03			E704D	D702	P701	G121	G202	G303	DBX1#14	GLH01-A1
L818F-HM1-10 ~ L818F-HM1-13		H L600	E704	D701	P701	G121	G202	G303	DBX1#14	GLH01-A1
L818F-HM1A-10 ~ L818F-HM1A-13		H L600	E704D	D702	P701	G121	G202	G303	DBX1#14	GLH01-A1

09.08.28

L818F自動切線型規格件表/CONVERSION CHART

MODEL 機 型	SUB-CLASS 規 格	OPERATING PANEL 操作盒	NEEDLE PLATE 針 板	FEED DOG 送 具	PRESSER FOOT 押 具	HOOK ASM 梭 頭	BOBBIN CASE ASM 梭 殼	BOBBIN 梭 子	NEEDLE 針 號	HAND WHEEL 皮帶輪
L818F-H1-00 ~ L818F-H1-03	中厚布 至 厚布料 ／ from medium weight material to heavy wei--ght material	LA55F-A	E711	D711	P711	G125	G202	G303	DBX1#21	GLH01-A1
L818F-H1-00A ~ L818F-H1-03A			E711	D711	P711	G125	G202	G303	DBX1#21	GLH01Q-E
L818F-H1A-00 (L818F-H1C-00) ~ ~ L818F-H1A-03 (L818F-H1C-03)			E711D	D711D	P711D	G125	G202	G303	DBX1#21	GLH01-A1
L818F-H1A-00A (L818F-H1C-00A) ~ ~ L818F-H1A-03A (L818F-H1C-03A)			E711D	D711D	P711D	G125	G202	G303	DBX1#21	GLH01Q-E
L818F-H1-10 ~ L818F-H1-13		H L600	E711	D711	P711	G125	G202	G303	DBX1#21	GLH01-A1
L818F-H1A-10 (L818F-H1C-10) ~ ~ L818F-H1A-13 (L818F-H1C-13)		H L600	E711D	D711D	P711D	G125	G202	G303	DBX1#21	GLH01-A1

09.08.28

訂 購 生 產 機 型 ： L818F自動切線型規格件表/CONVERSION CHART

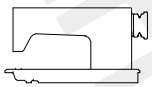	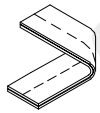		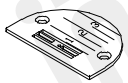	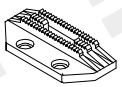	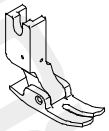	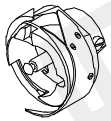				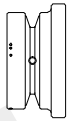
MODEL	SUB-CLASS	OPERATING PANEL	NEEDLE PLATE	FEED DOG	PRESSER FOOT	HOOK ASM	BOBBIN CASE ASM	BOBBIN	NEEDLE	HAND WHEEL
機 型	規 格	操作盒	針 板	送 具	押 具	梭 頭	梭 殼	梭 子	針 號	皮帶輪
L818F-F1-00 ~ L818F-F1-03	超 薄 布 料 ／ fine weight material	LA55F-A	E721	D721	P721	G113	G202	G303	DBX1SF#9	GLH01-A1
L818F-F1-00A ~ L818F-F1-03A			E721	D721	P721	G113	G202	G303	DBX1SF#9	GLH01Q-E
L818F-F1-10 ~ L818F-F1-13		H L600	E721	D721	P721	G113	G202	G303	DBX1SF#9	GLH01-A1
L818F-F1-20 ~ L818F-F1-23		LA55F-A	E721	D721	P721	G113	G202	G303	DBX1SF#9	GLH01-A1
L818F-F1-20A ~ L818F-F1-23A			E721	D721	P721	G113	G202	G303	DBX1SF#9	GLH01Q-E
L818F-F1-30 ~ L818F-F1-33		H L600	E721	D721	P721	G113	G202	G303	DBX1SF#9	GLH01-A1
L818F-K1-00 ~ L818F-K1-03	編 織 布 料 ／ knit	LA55F-A	E741	D741	P721	G121	G202	G303	DBX1#9	GLH01-A1
L818F-K1-00A ~ L818F-K1-03A			E741	D741	P721	G121	G202	G303	DBX1#9	GLH01Q-E
L818F-K1-10 ~ L818F-K1-13		H L600	E741	D741	P721	G121	G202	G303	DBX1#9	GLH01-A1

09.08.28

L818F-U PARTS LIST FOR LA GROUP

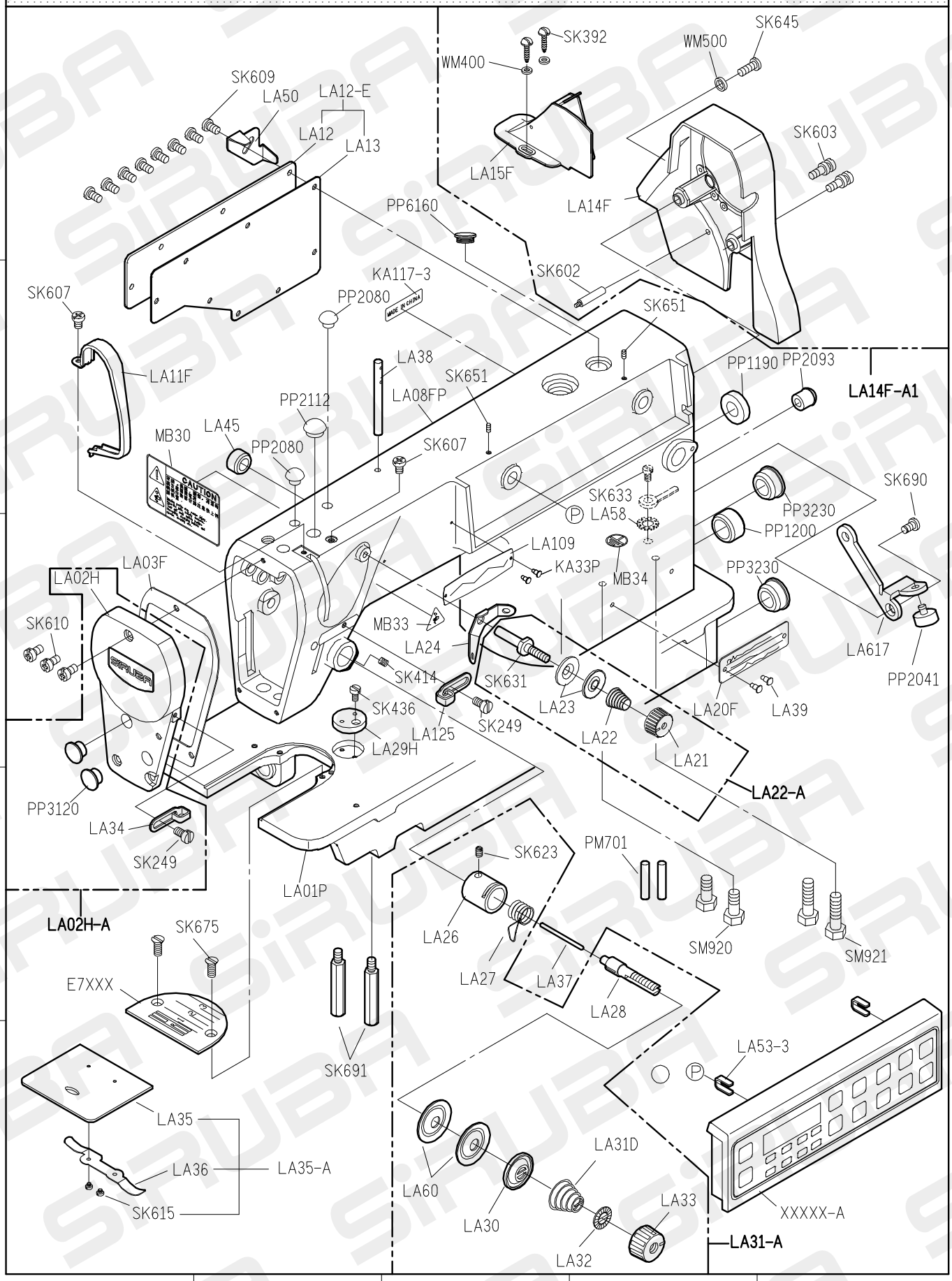

FOR L818F-U

10.07.21

L818F-U PARTS LIST FOR LB GROUP

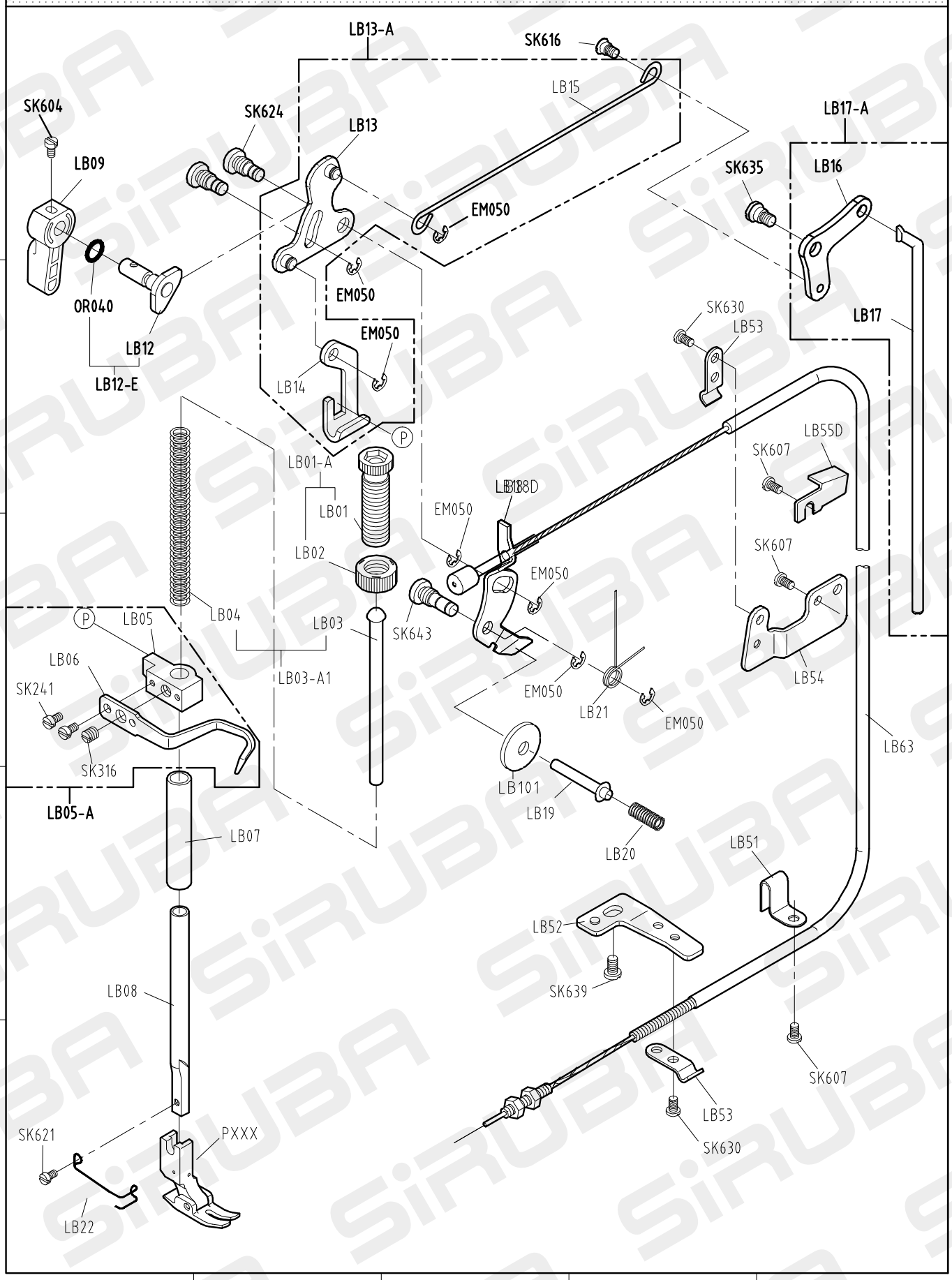

FOR L818F-U

10.08.09

L818F-U PARTS LIST FOR LC GROUP

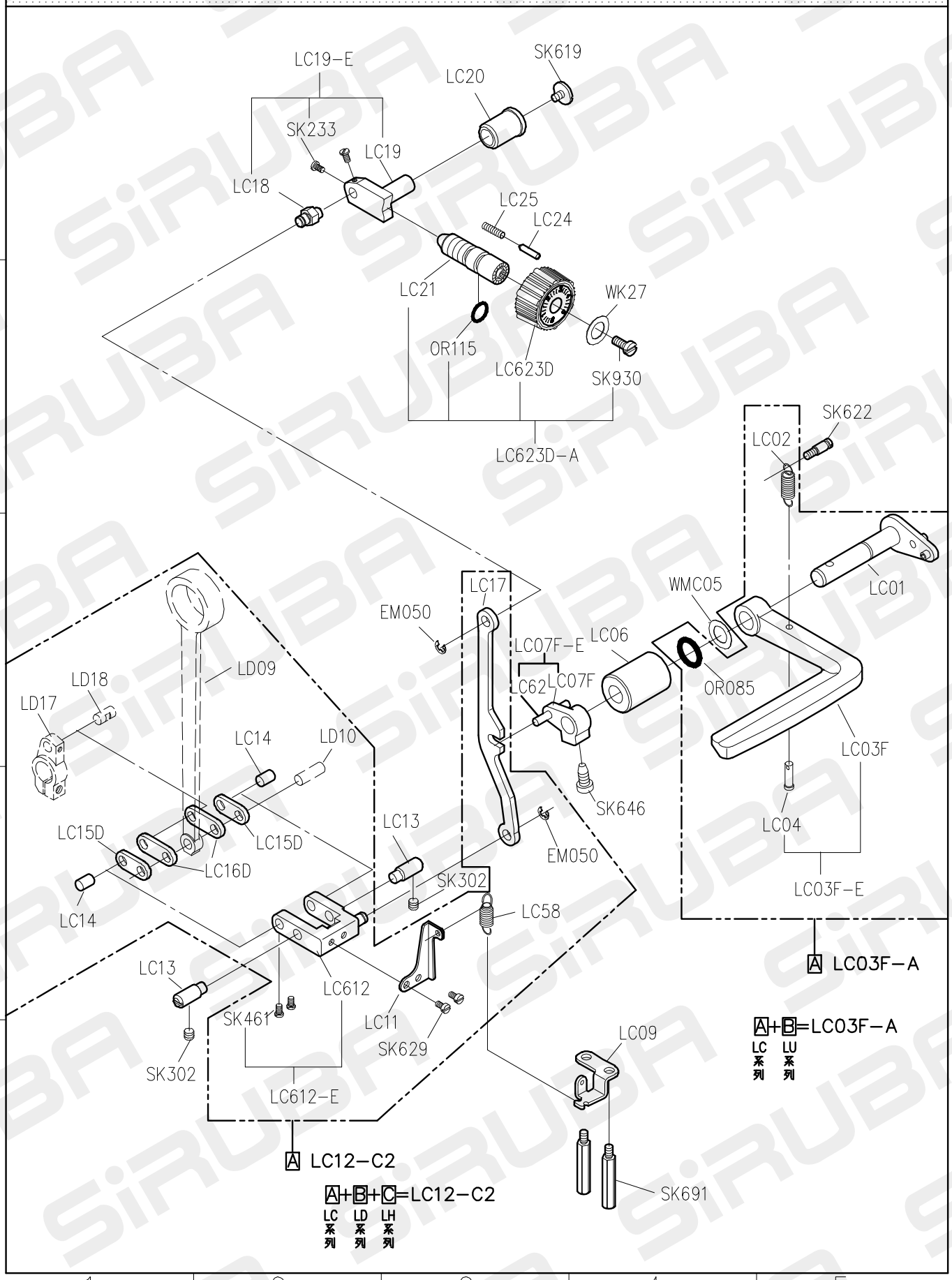

FOR L818F-U

10.02.07

L818F-U PARTS LIST FOR LD GROUP

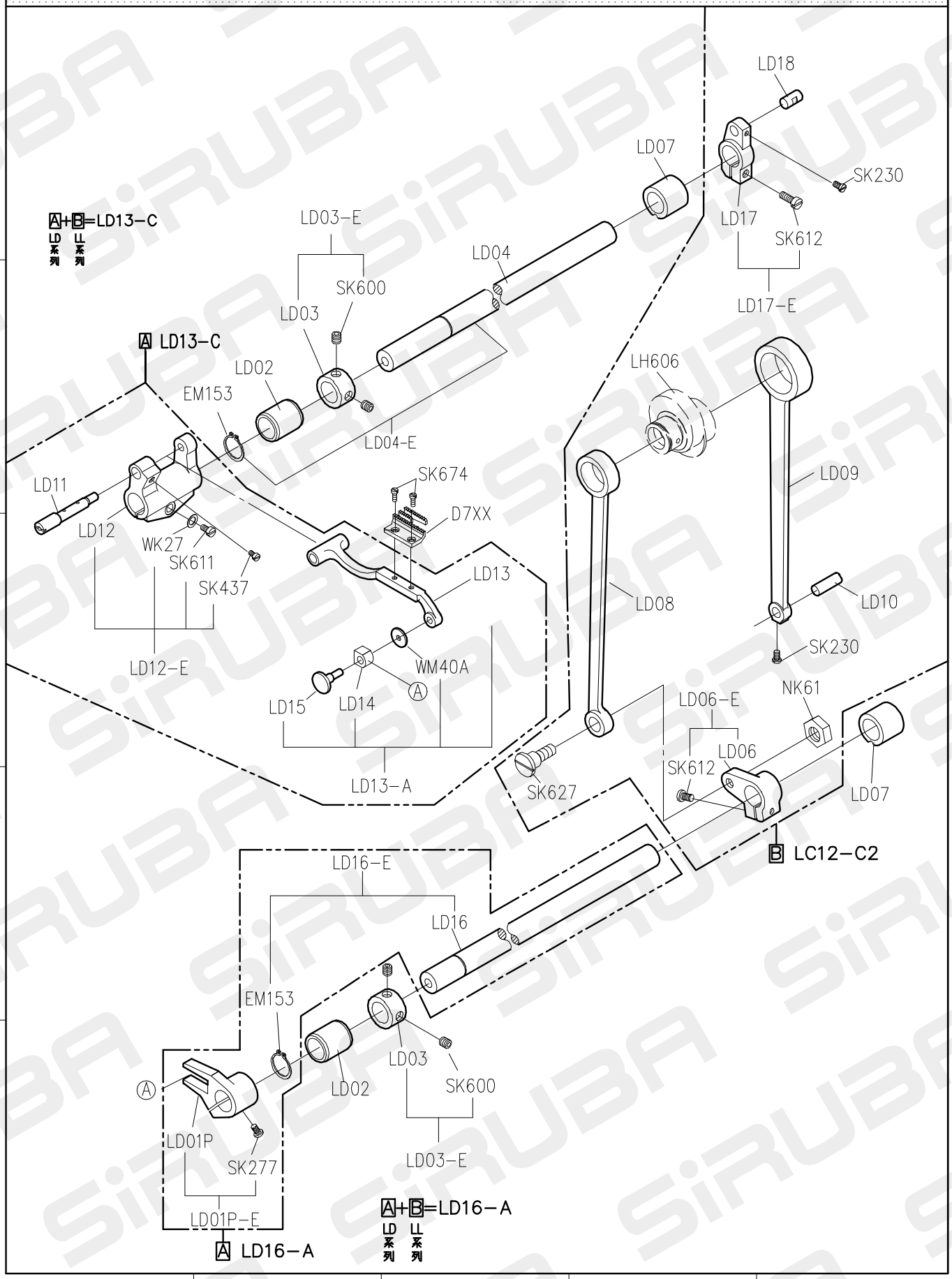

FOR L818F-U

10.02.07

L818F-U PARTS LIST FOR LE GROUP

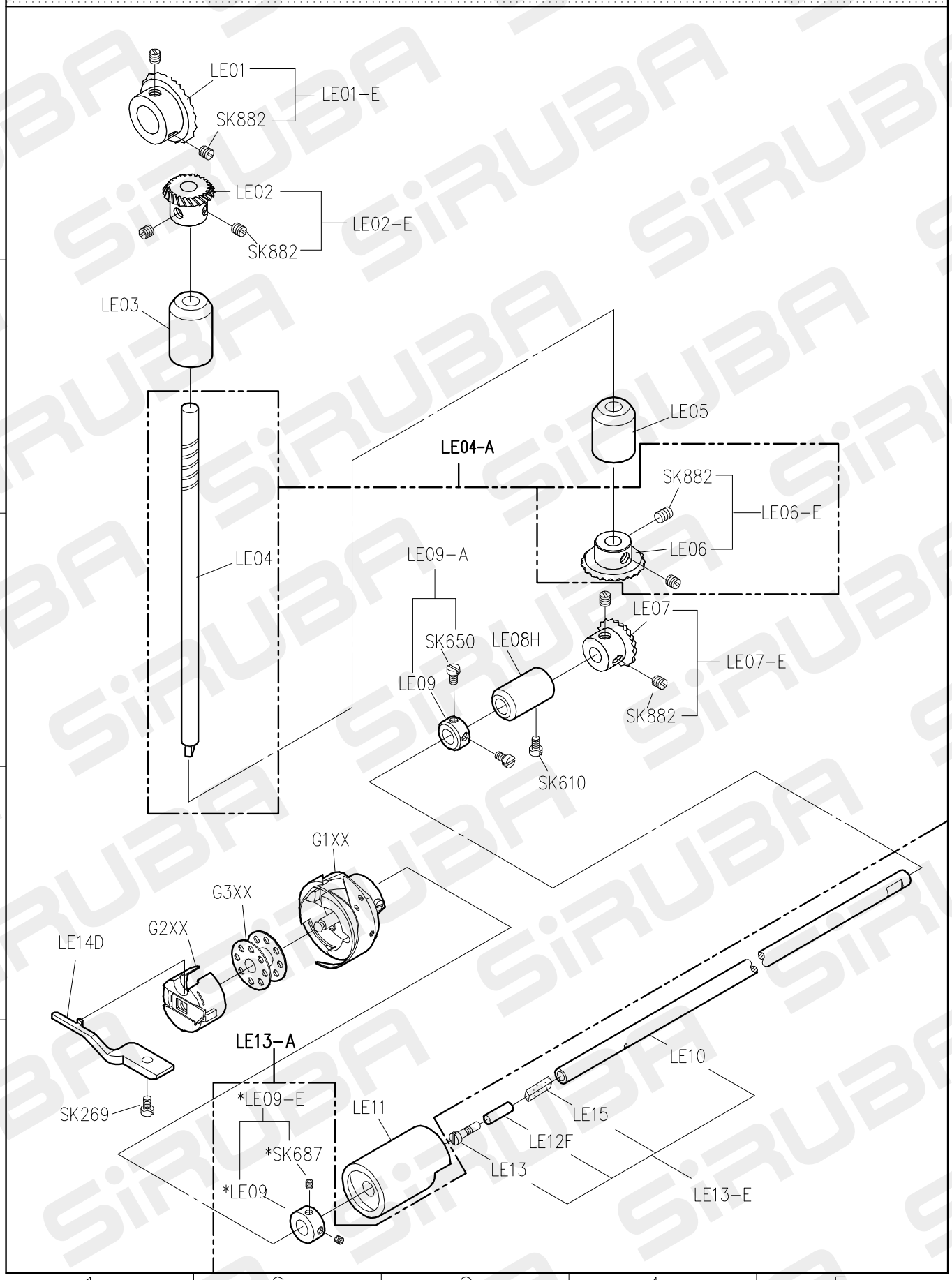

FOR L818F-U

10.02.07

L818F-U PARTS LIST FOR LG GROUP

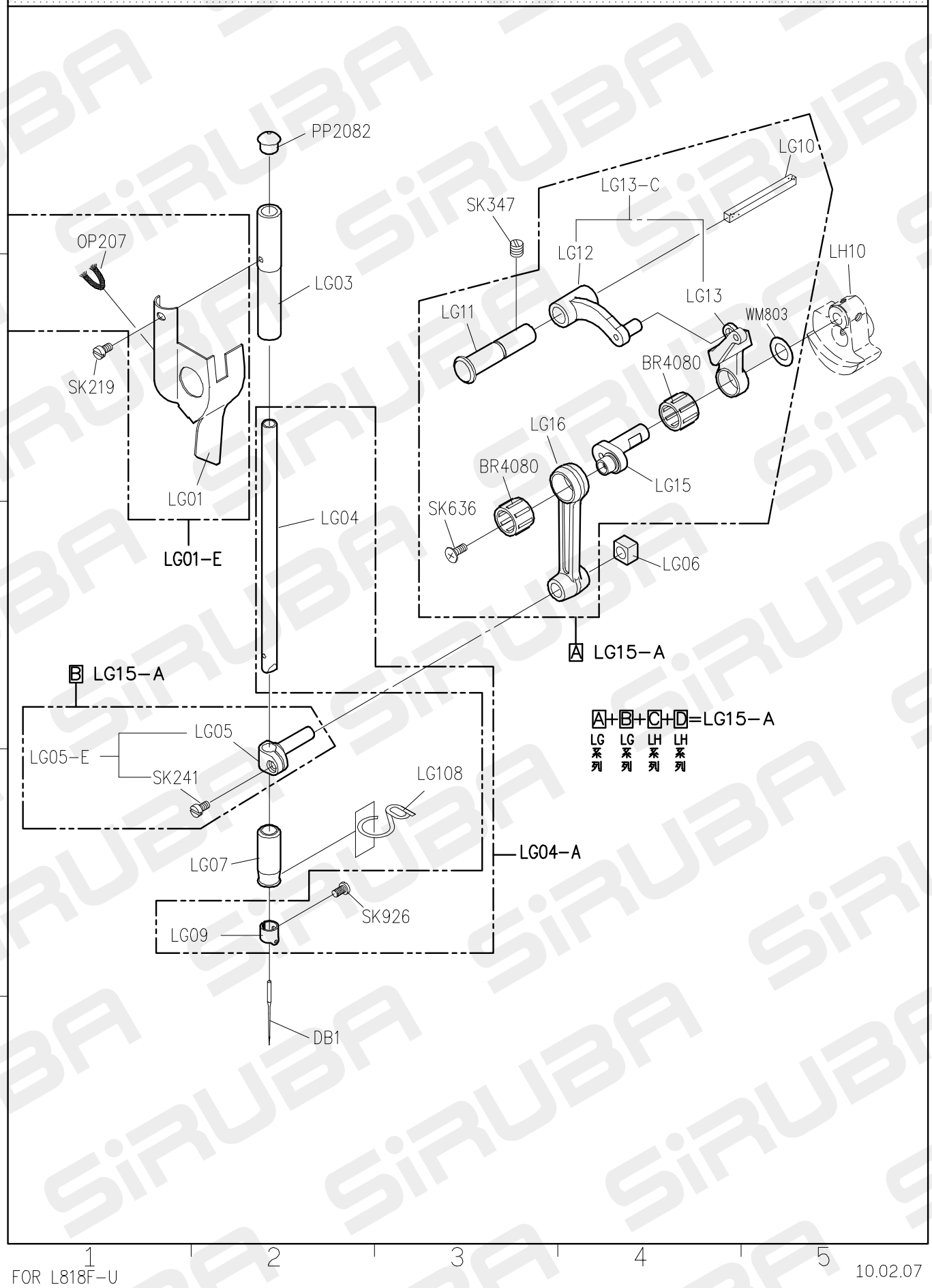

L818F-U PARTS LIST FOR LH GROUP

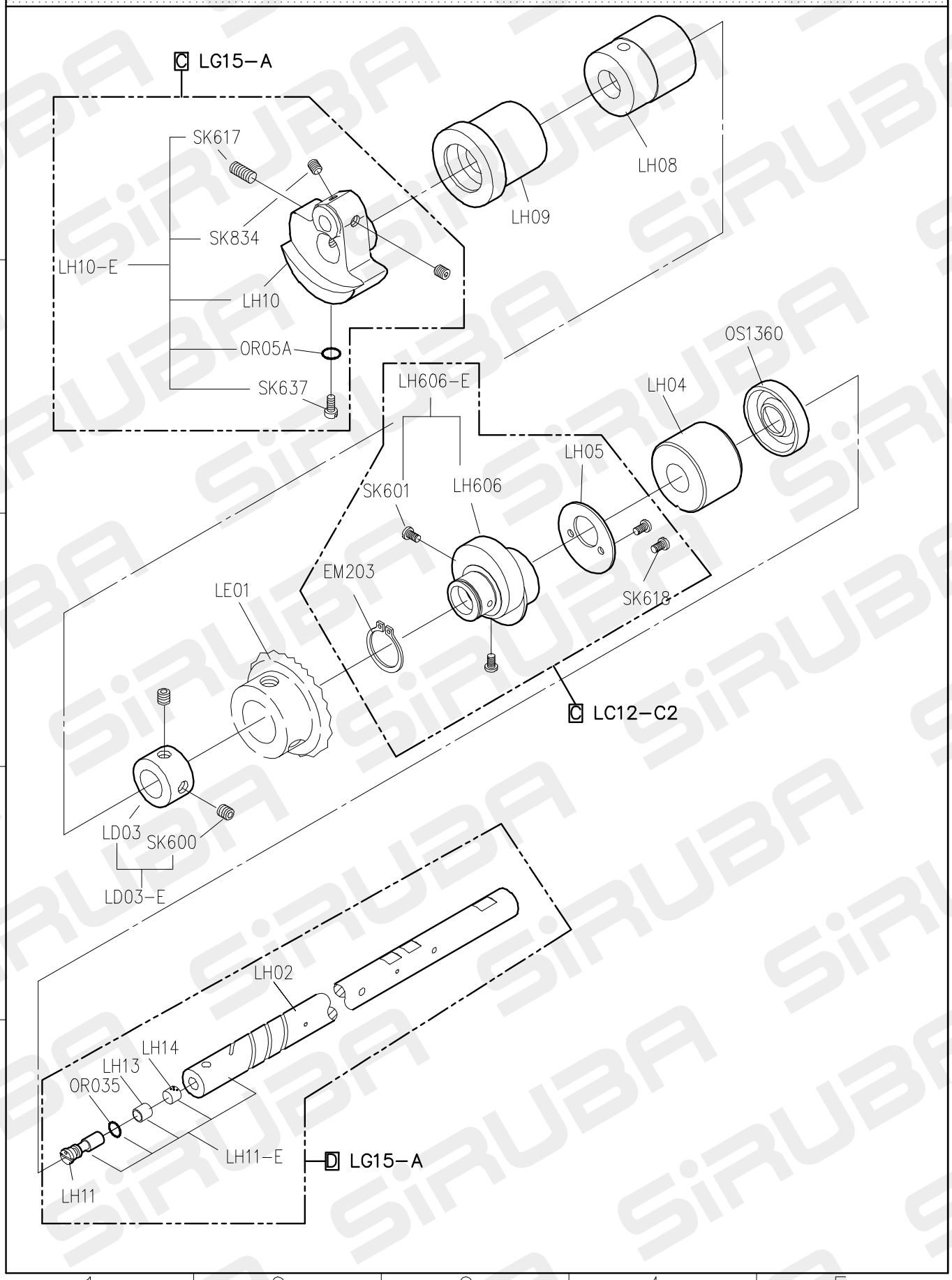

FOR L818F-U

10.02.07

L818F-U PARTS LIST FOR LH GROUP

	擺動式切刀	旋轉式切刀
A H廠牌馬達	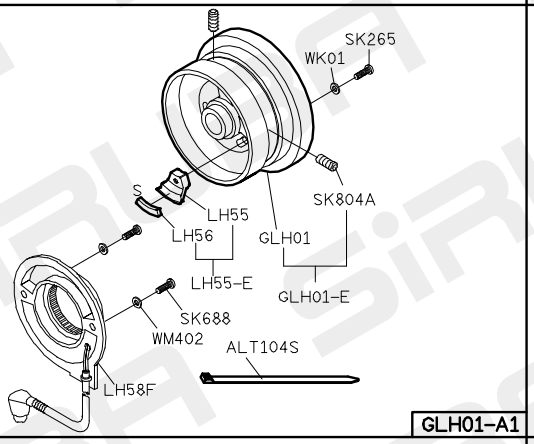 GLH01-A1	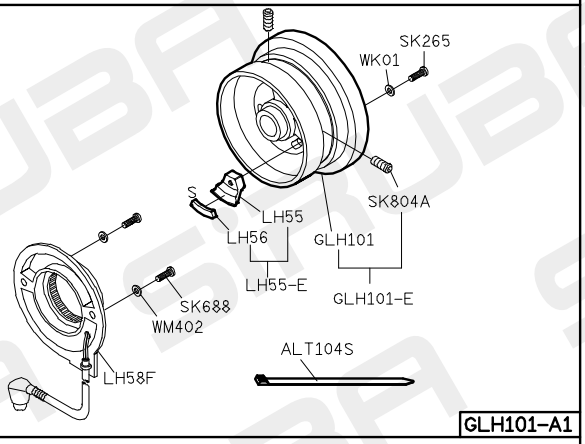 GLH101-A1
B 其他廠牌馬達(可加後拉輪)	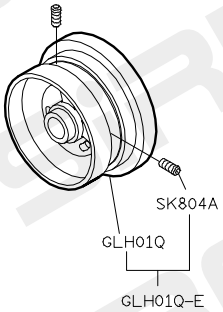 GLH01Q-E	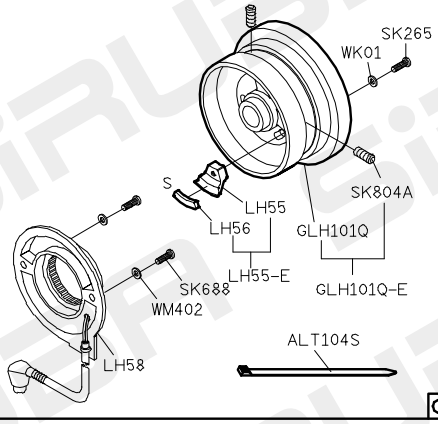 GLH101Q-A1
C D P廠牌馬達	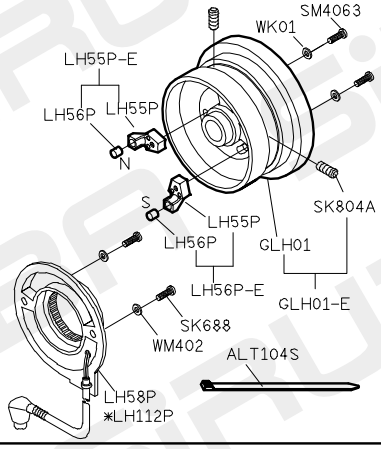 GLH01P-A	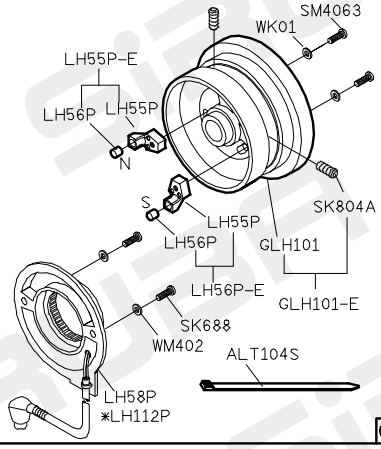 GLH101P-A
E P廠牌馬達(可加後拉輪)	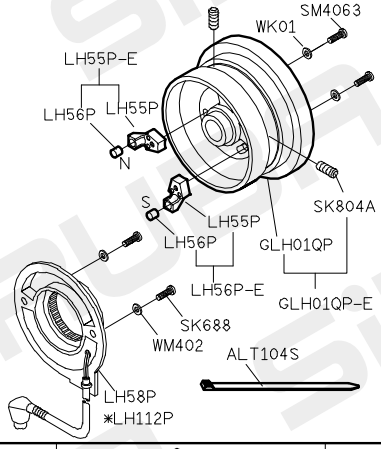 GLH01QP-A	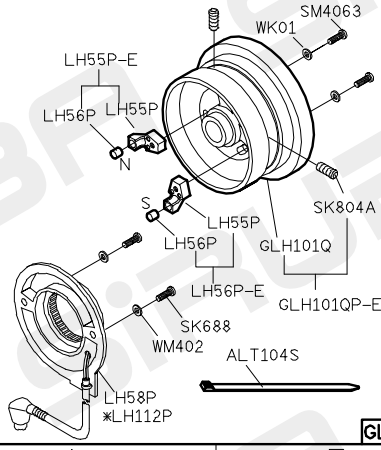 GLH101QP-A

1 2 3 4 5

FOR ALL L818F/L819 TRIMMER

10.02.07

*P牌單剪線馬達

L818F-U PARTS LIST FOR LL GROUP

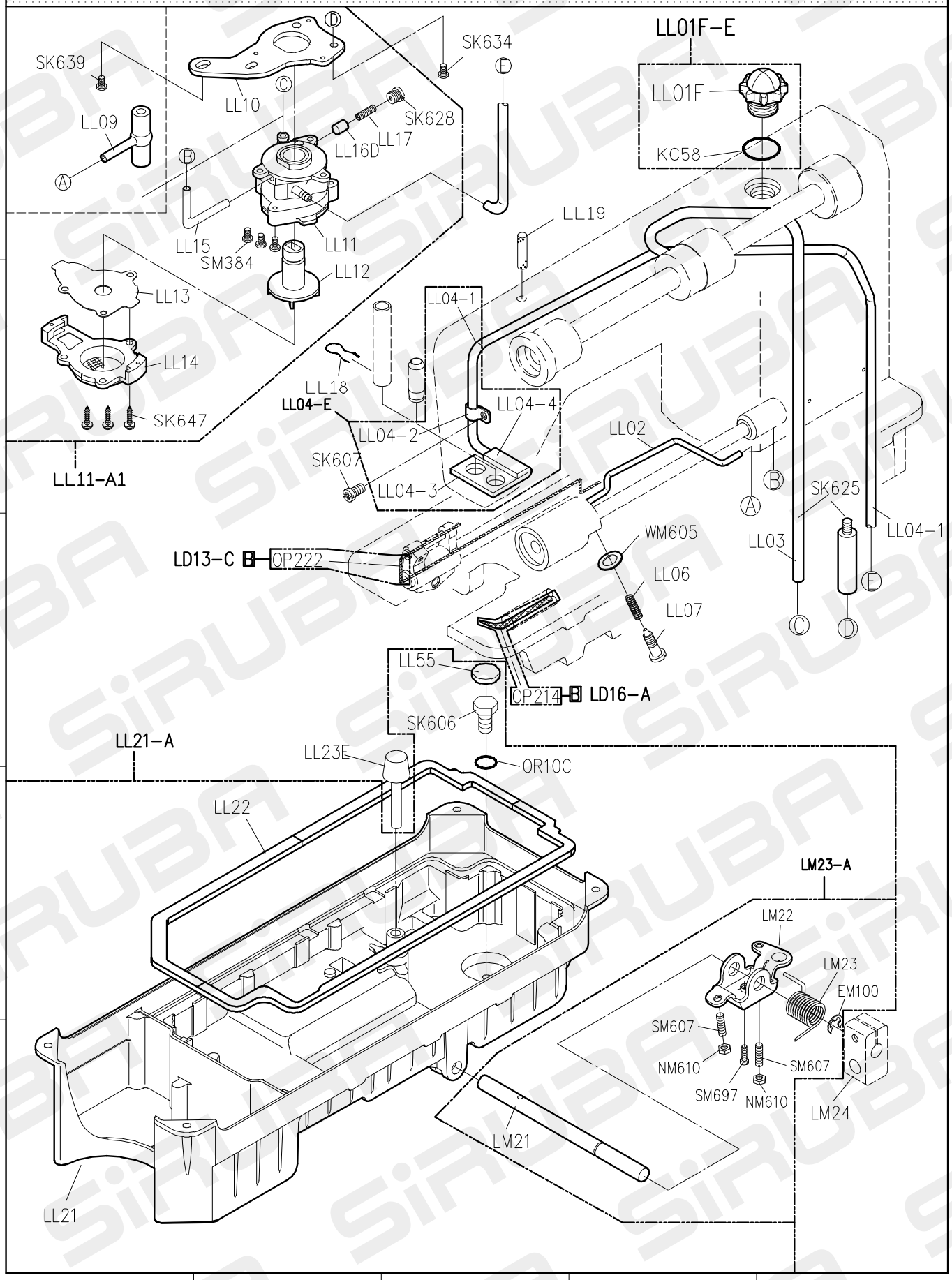

10.07.26

ALL-L818F PARTS LIST FOR LM GROUP

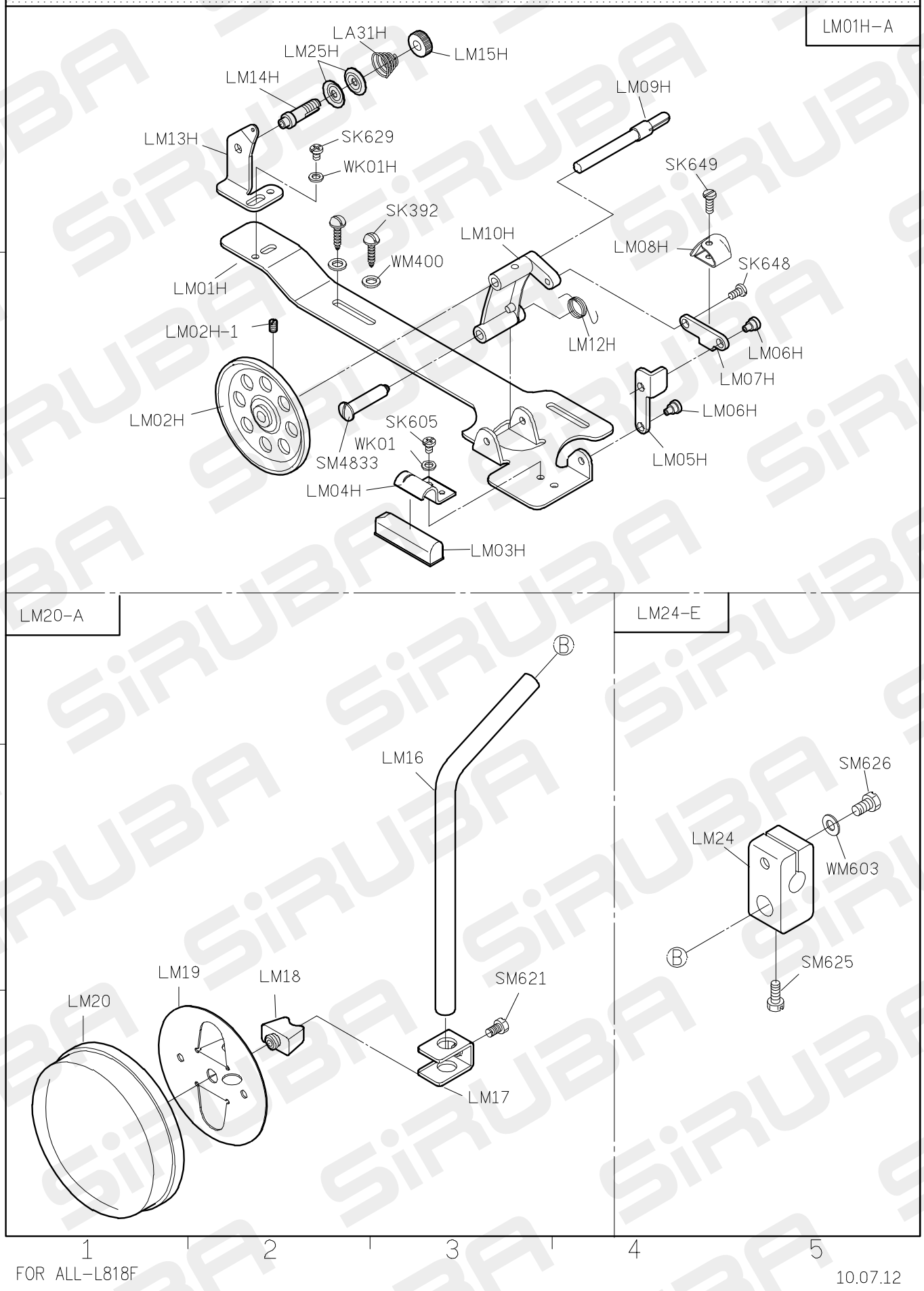

FOR ALL-L818F

10.07.12

L818F-U PARTS LIST FOR LU GROUP

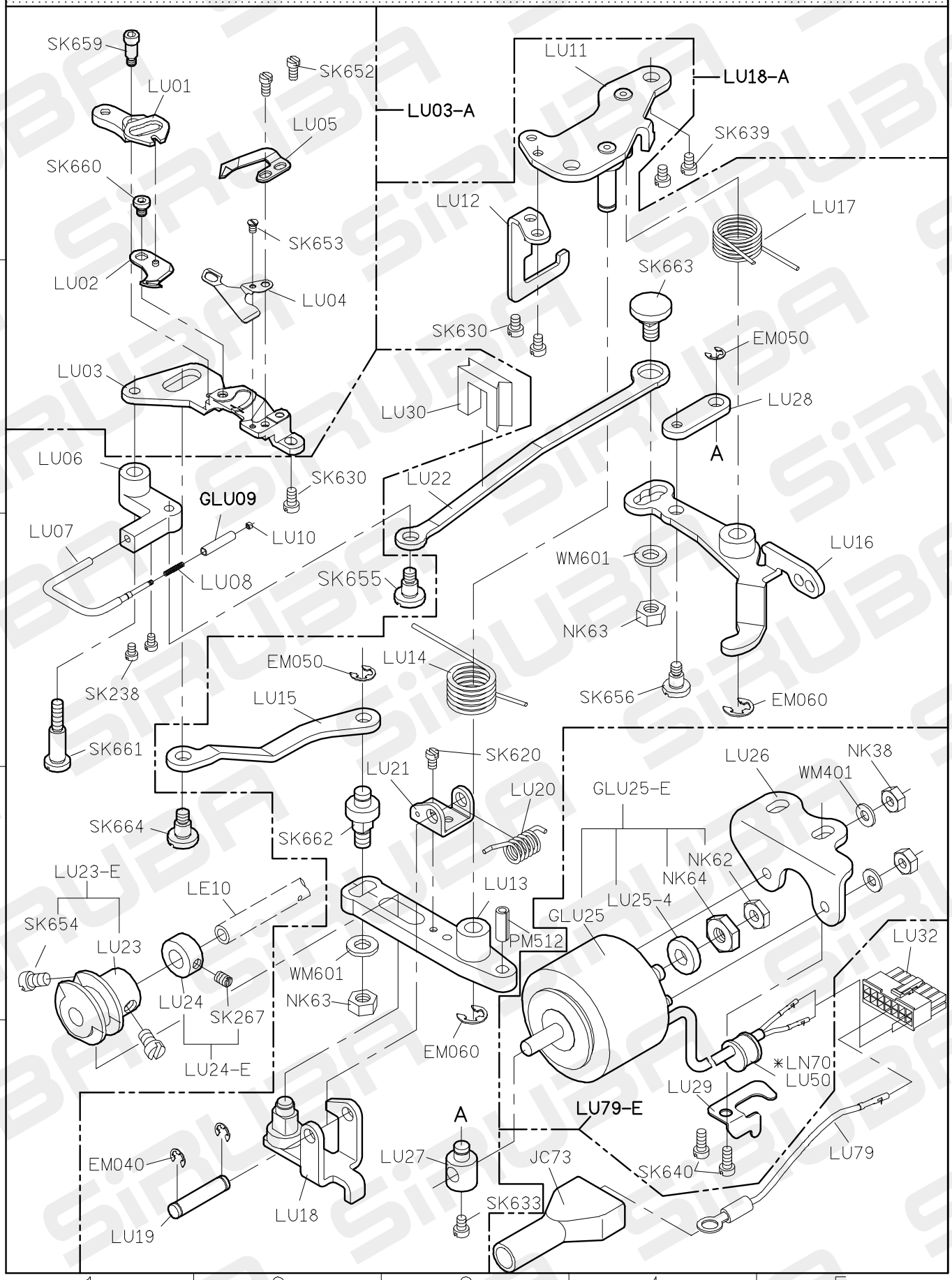

FOR L818F-U

10.02.07

L818F-U PARTS LIST FOR LU GROUP

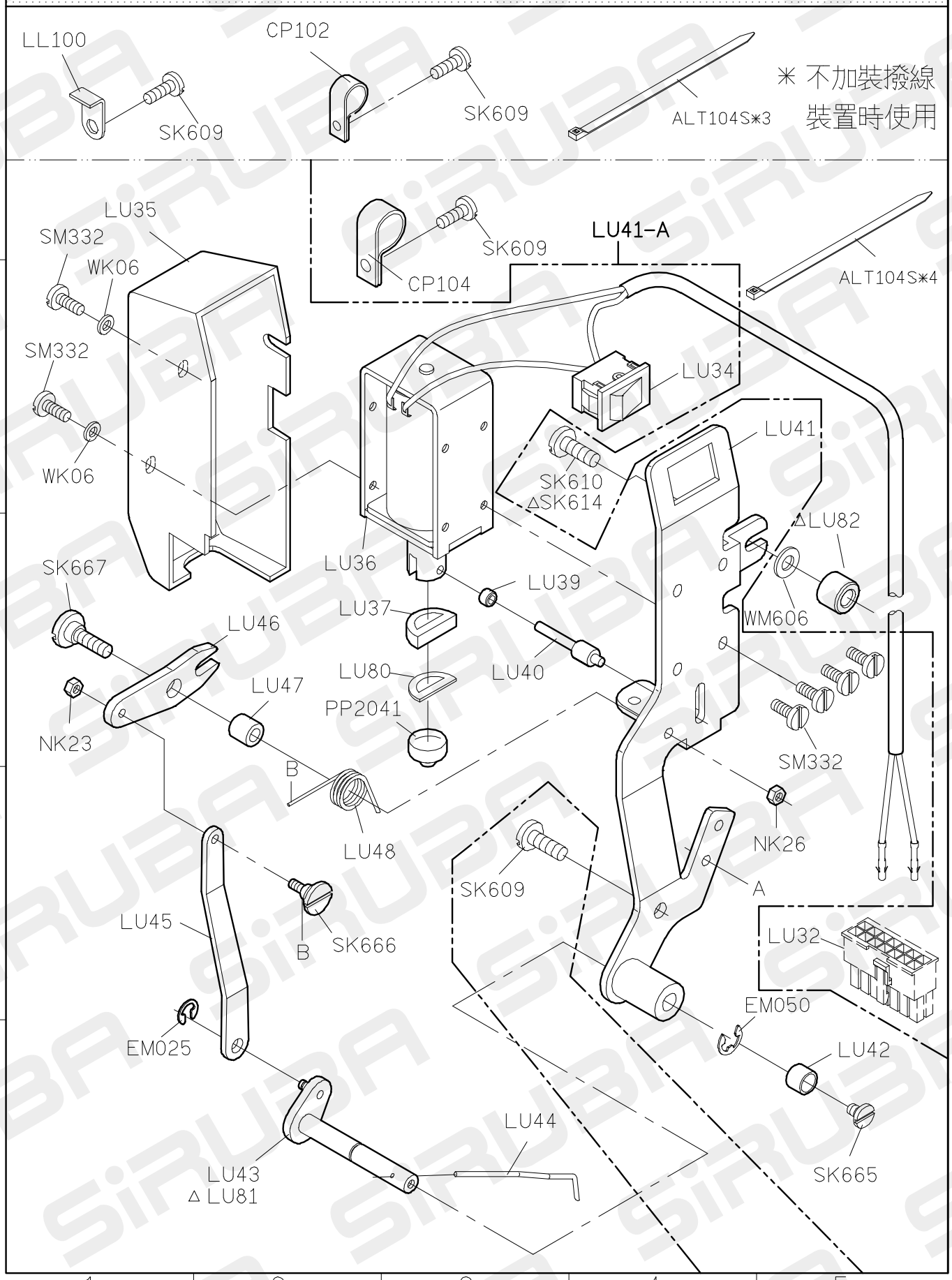

L818F-U PARTS LIST FOR LU GROUP

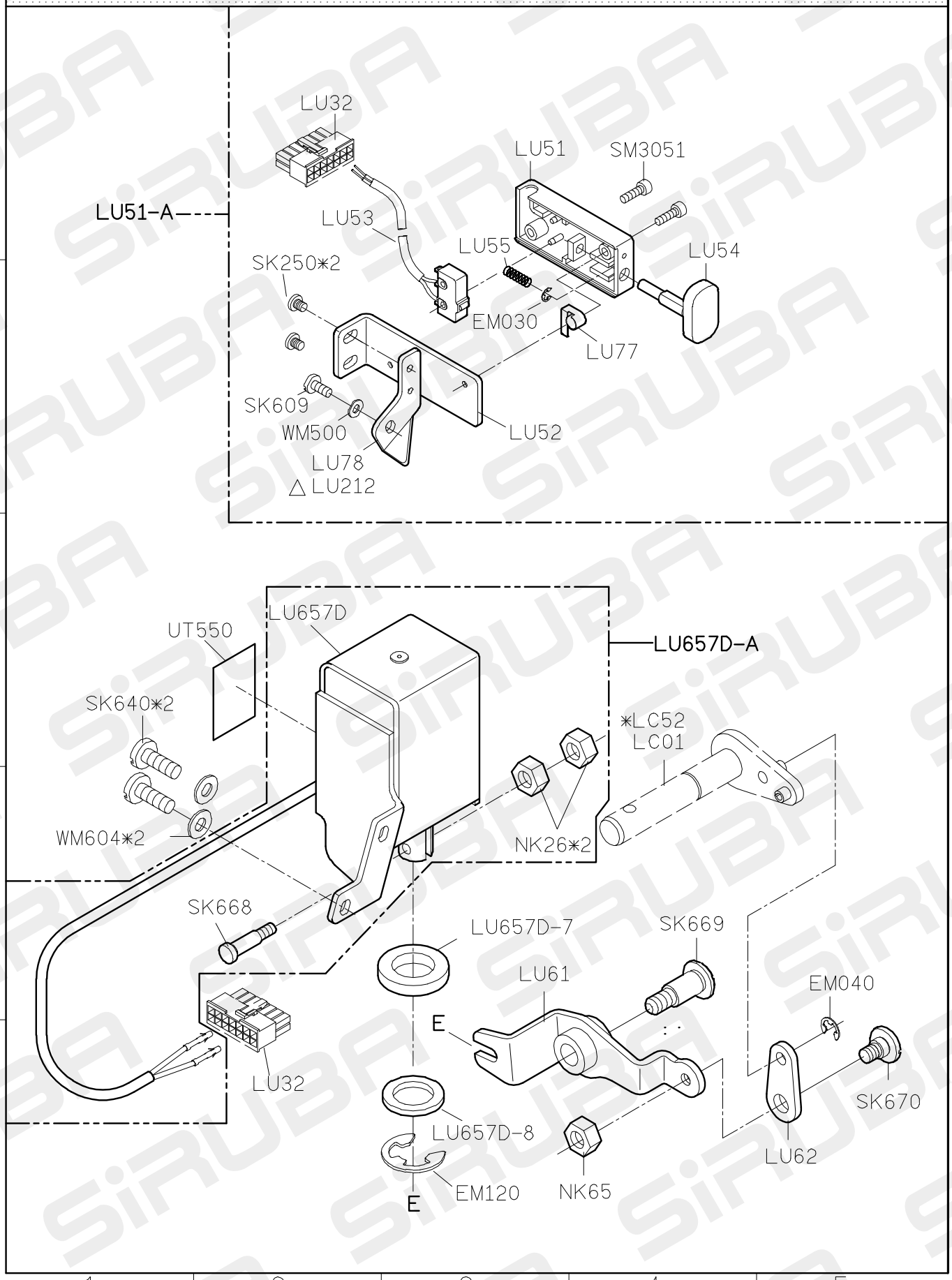

FOR L818F-U

10.02.07

L818F-U PARTS LIST FOR LU GROUP

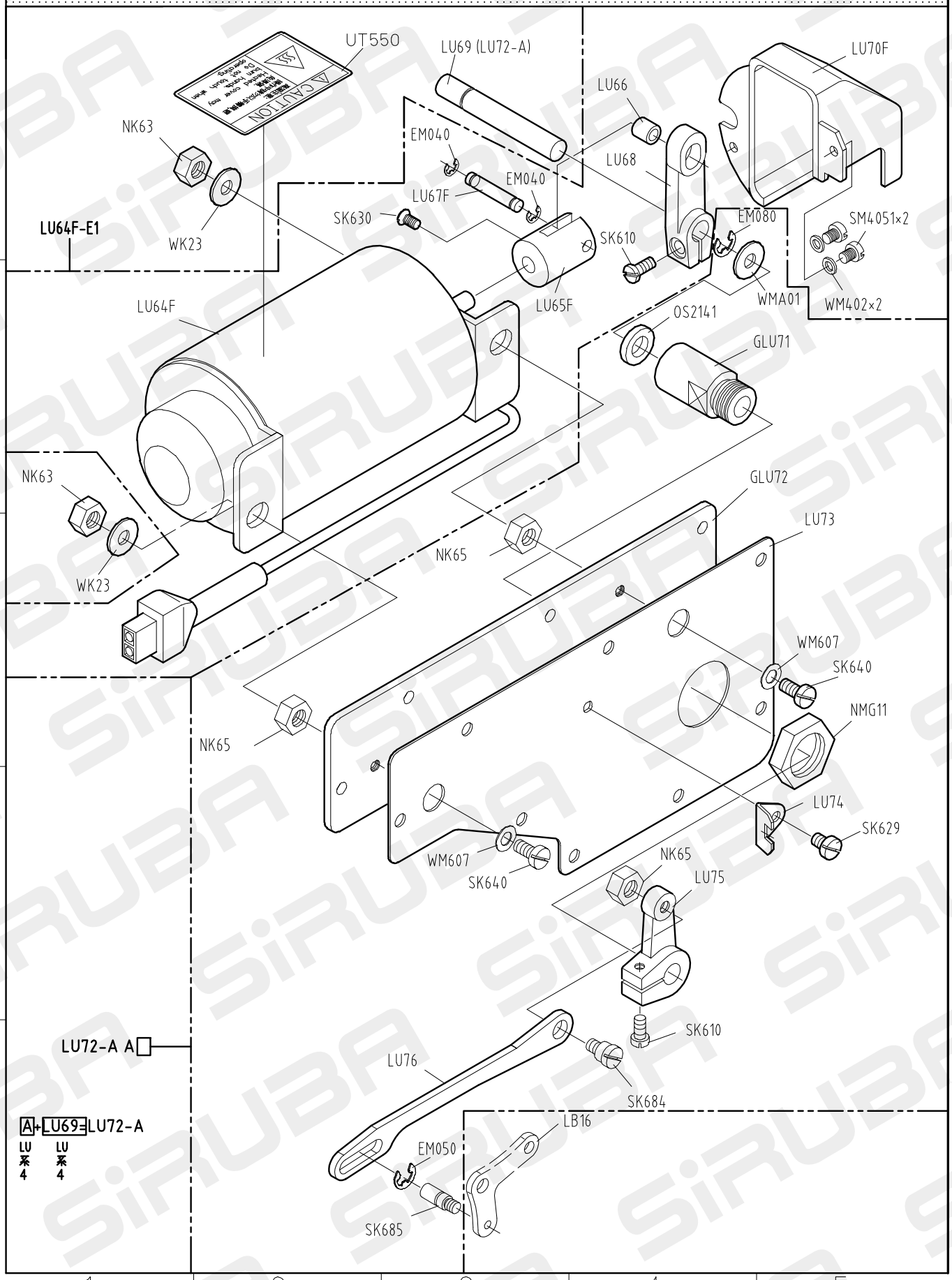

FOR L818F-U

10.02.07

L818F-U PARTS LIST FOR LU GROUP

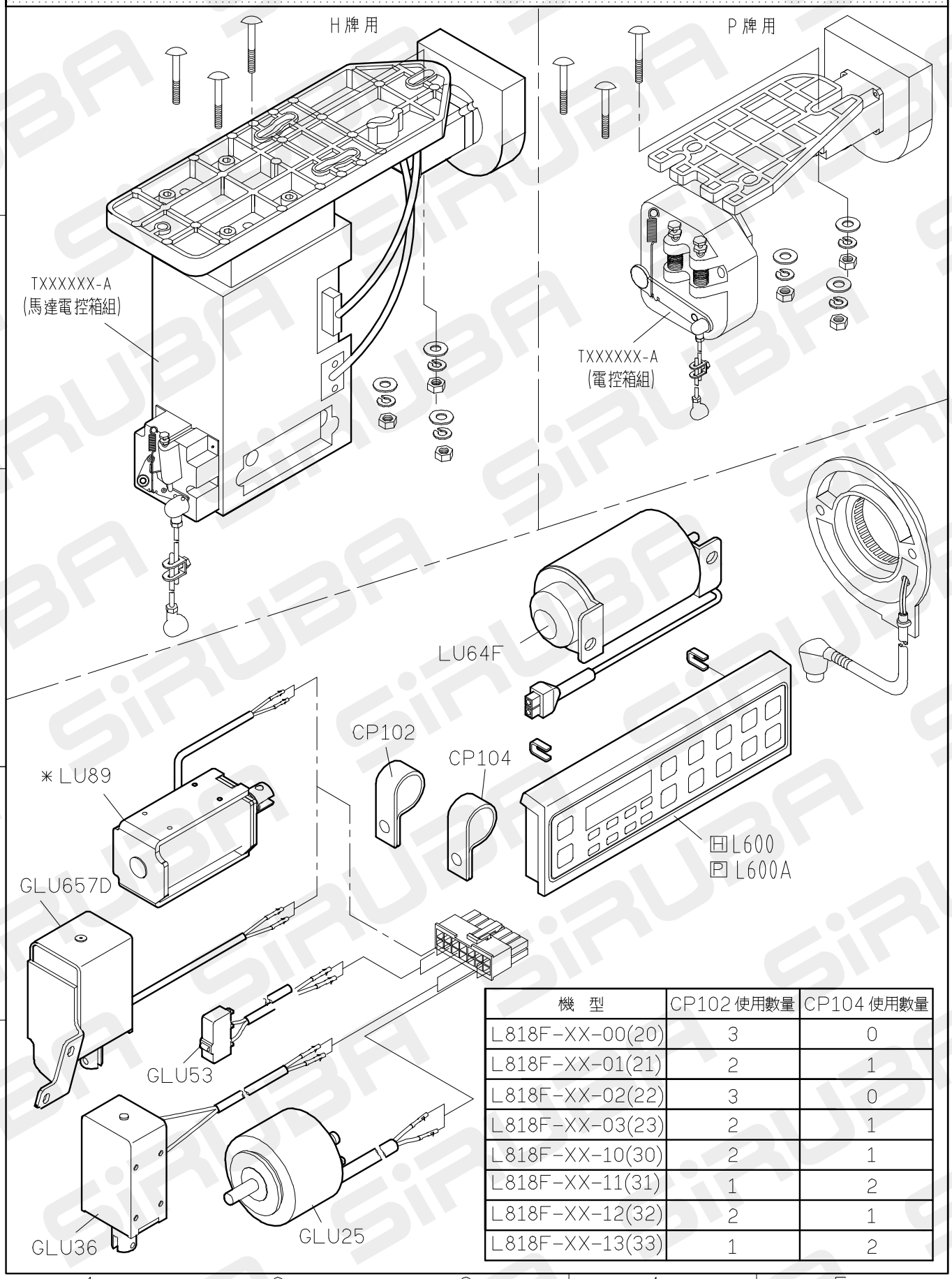

機　型	CP102 使用數量	CP104 使用數量
L818F-XX-00(20)	3	0
L818F-XX-01(21)	2	1
L818F-XX-02(22)	3	0
L818F-XX-03(23)	2	1
L818F-XX-10(30)	2	1
L818F-XX-11(31)	1	2
L818F-XX-12(32)	2	1
L818F-XX-13(33)	1	2

ALL-L818F PARTS LIST FOR LW GROUP

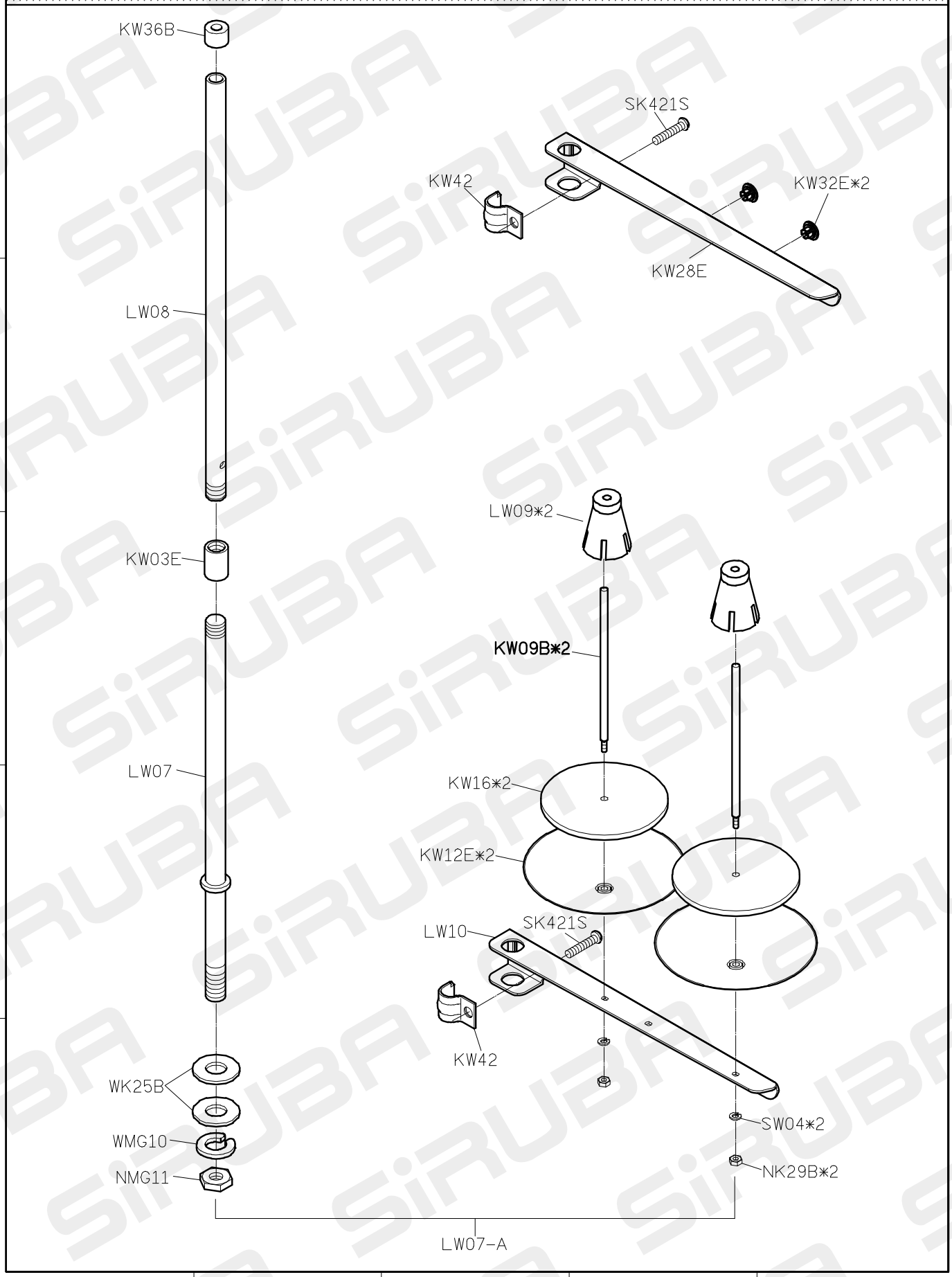

FOR ALL-L818F

10.02.07

L818F-U PARTS LIST FOR LZ GROUP

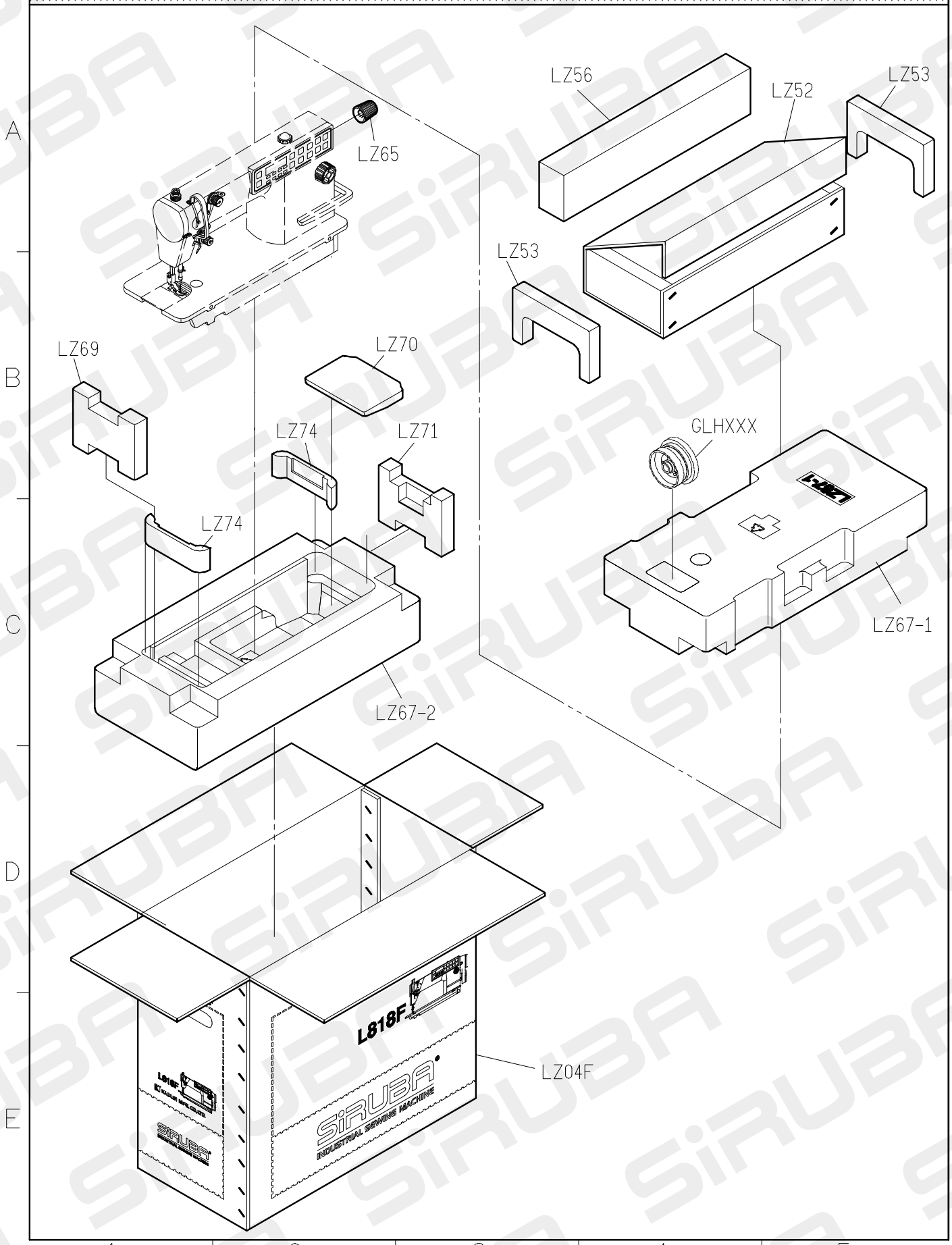

TABLE CUT-OUT OF L818F-T2

單針高速平縫下乘式車板圖
TABLE CUT-OUT SEMI-SUBMERGED
單位/UNIT:mm
所有尺寸公差/DIFFERENCE:±2
L818-T2-1070 長度(L):1070/重量:10kg±5%
L818-T2 長度(L):1200/重量:11.4kg±5%
全封邊灰格紋光塑面台板

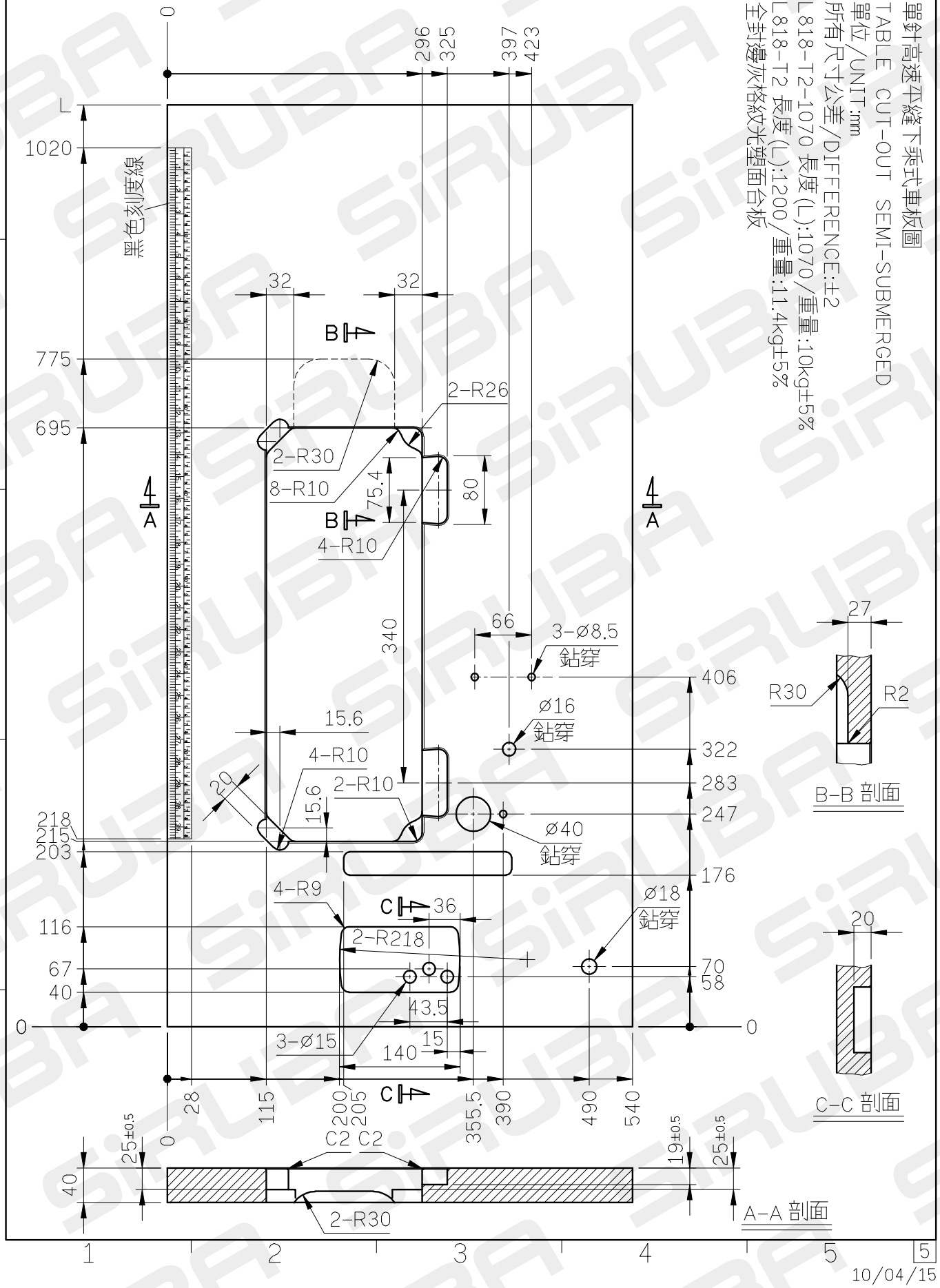

10/04/15

TABLE CUT-OUT OF L818F-T3
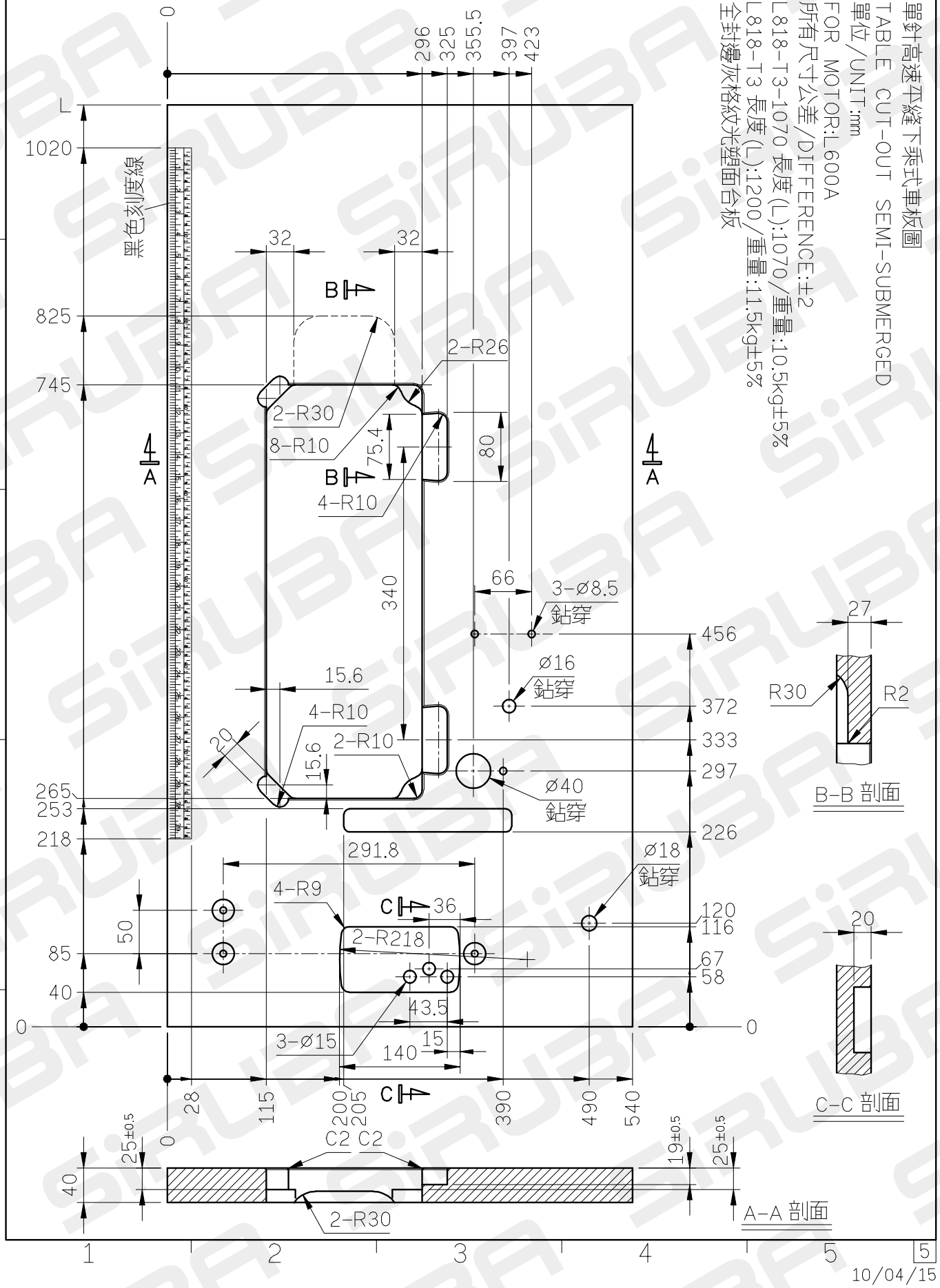
單針高速平縫下乘式車板圖
TABLE CUT-OUT SEMI-SUBMERGED
單位/UNIT:mm
FOR MOTOR:L600A
所有尺寸公差/DIFFERENCE:±2
L818-T3-1070 長度(L):1070/重量:10.5kg±5%
L818-T3 長度(L):1200/重量:11.5kg±5%
全封邊灰格紋光塑面台板