L818F-NF基本型規格件表/CONVERSION CHART

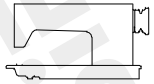	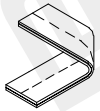	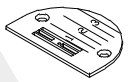	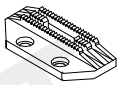	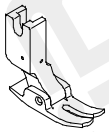	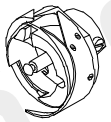	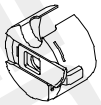		
MODEL	SUB-CLASS	NEEDLE PLATE	FEED DOG	PRESSER FOOT	HOOK ASM	BOBBIN CASE ASM	BOBBIN	NEEDLE
機 型	規 格	針 板	送 具	押 具	梭 頭	梭 殼	梭 子	針 號
L818F-NM1	薄至中厚布料 / from light weight material to medium wei--ght material	E706	D704	P708	G123	G201	G301	DBX1#14
L818F-NH1	中厚至厚布料 / from medium weight material to heavy wei--ght material	E707	D714	P714	G124	G201	G301	DBX1#22

09.08.28

L818F-NFPARTS LIST FOR LA GROUP

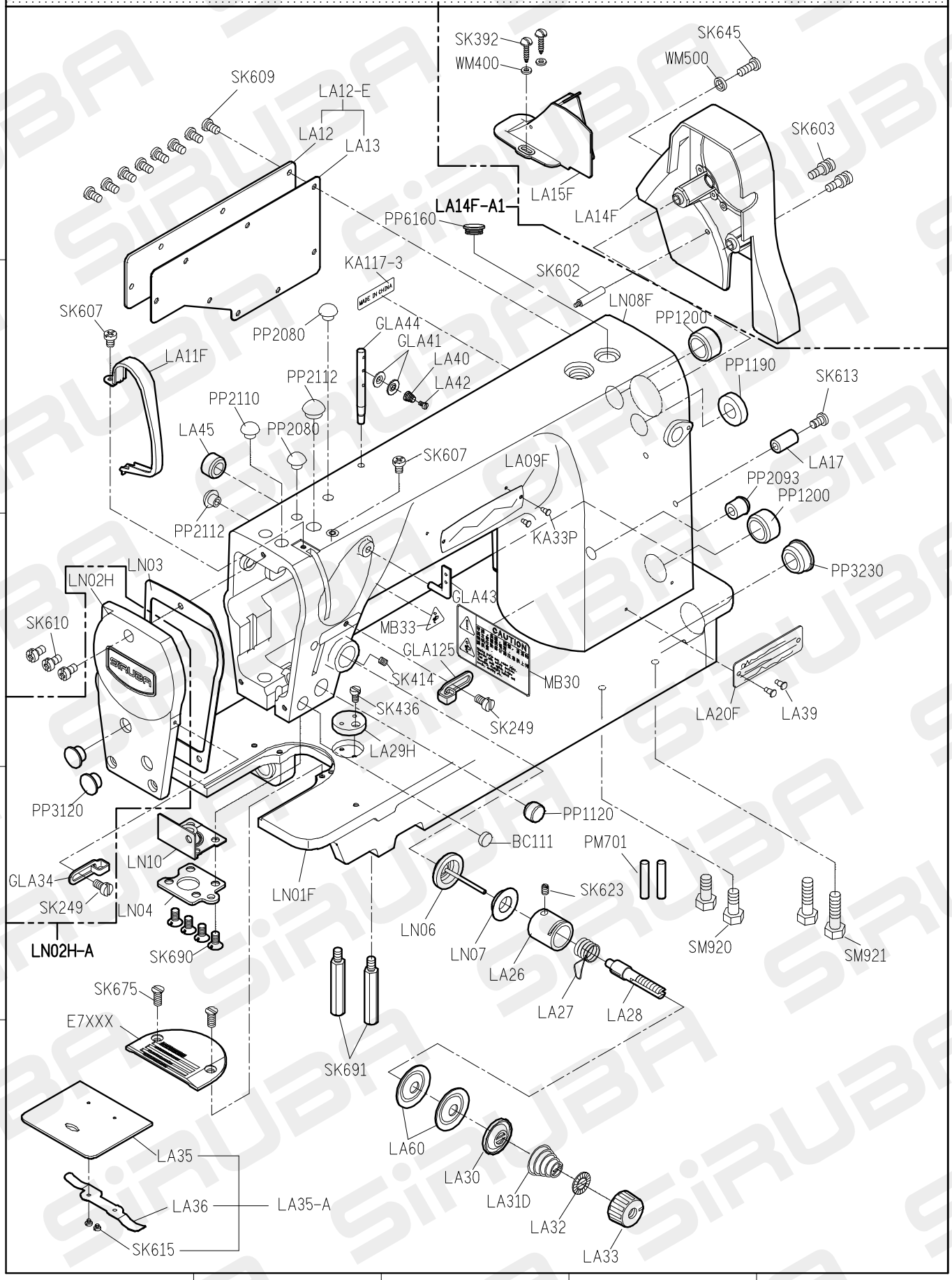

FOR L818-NF

10.07.21

L818F-NF PARTS LIST FOR LB GROUP

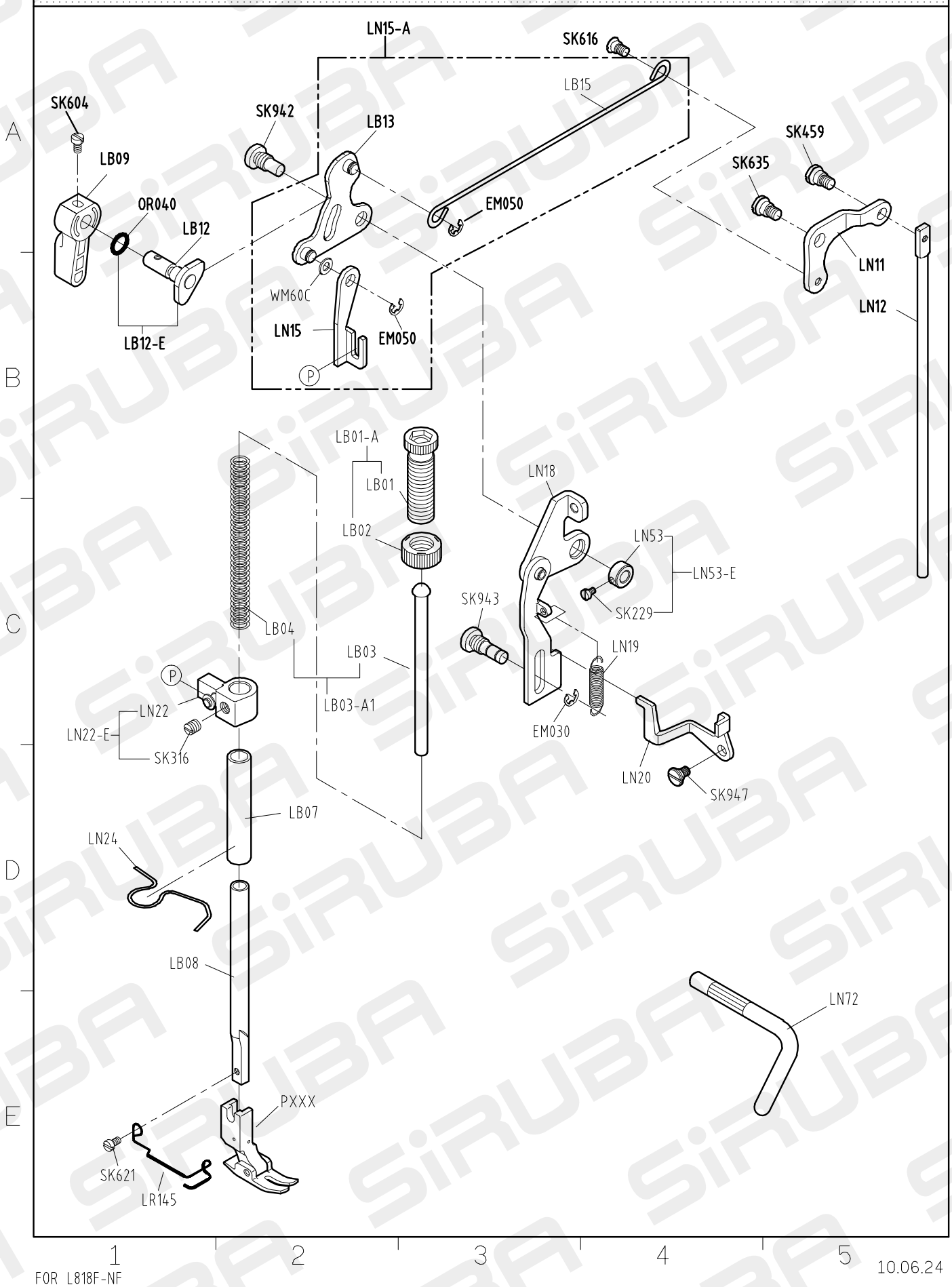

FOR L818F-NF

10.06.24

L818F-NF PARTS LIST FOR LC GROUP

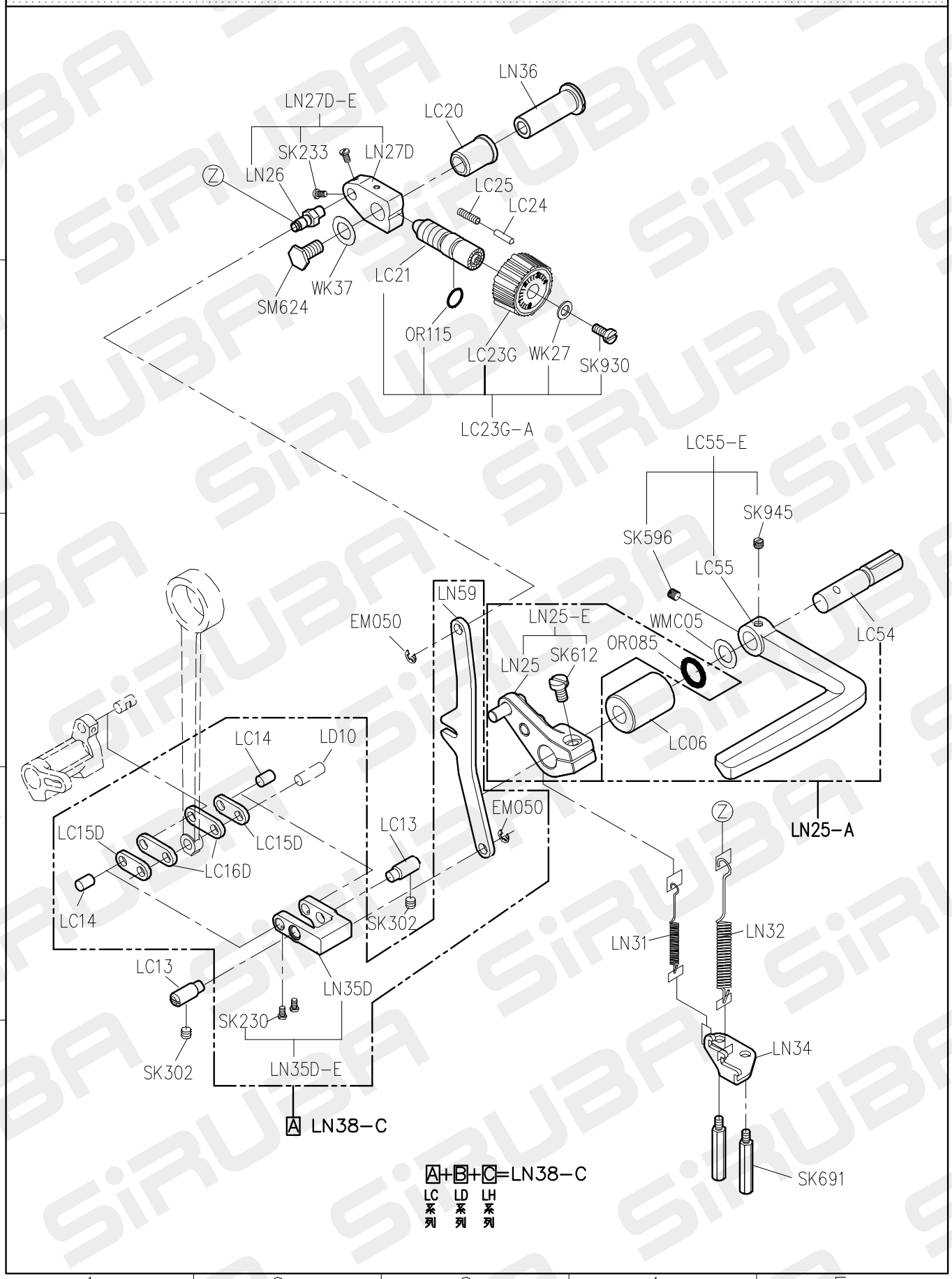

FOR L818F-NF

10.02.07

L818F-NF PARTS LIST FOR LD GROUP

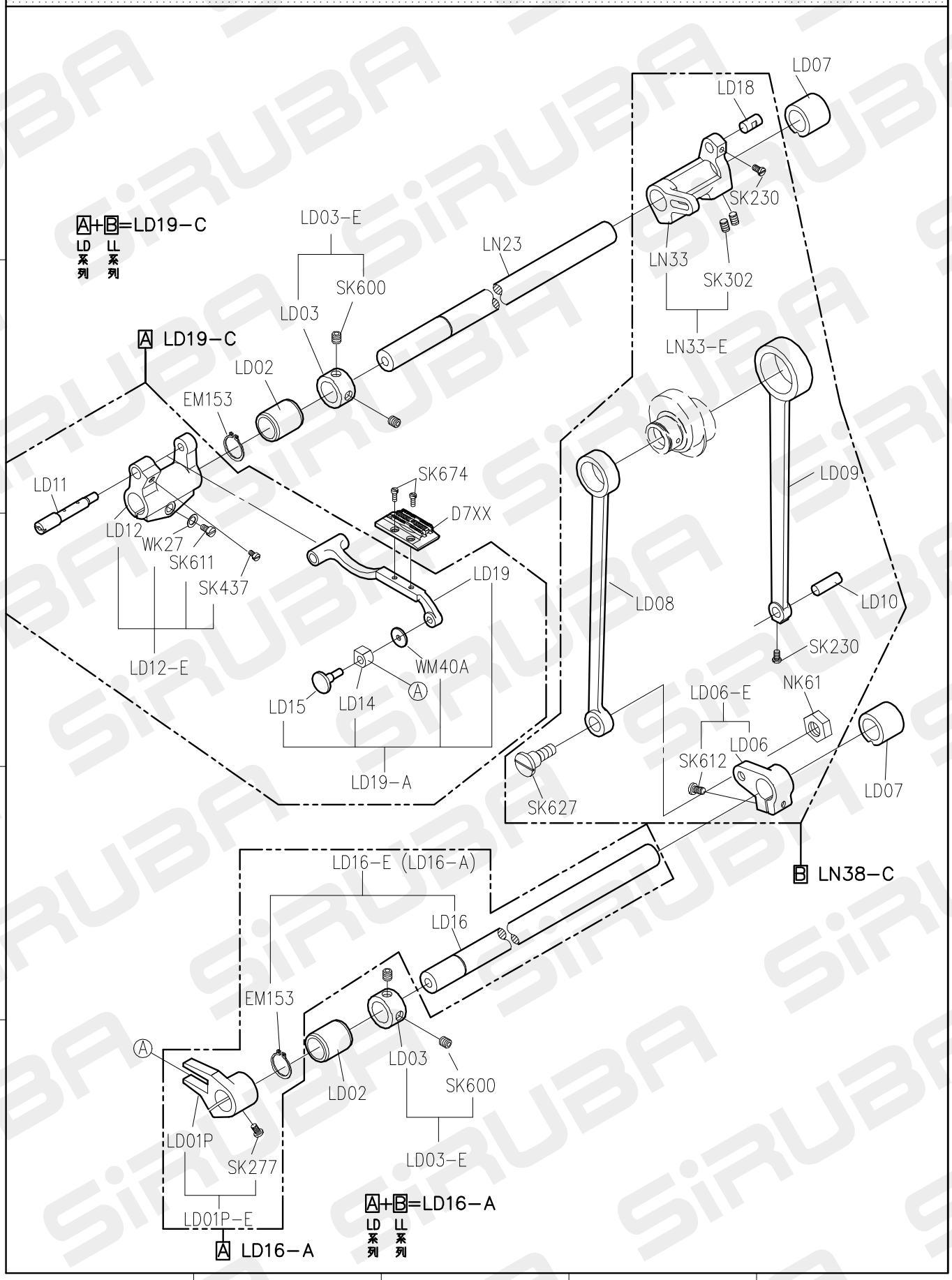

FOR L818F-NF

10.02.07

L818F-NF PARTS LIST FOR LE GROUP

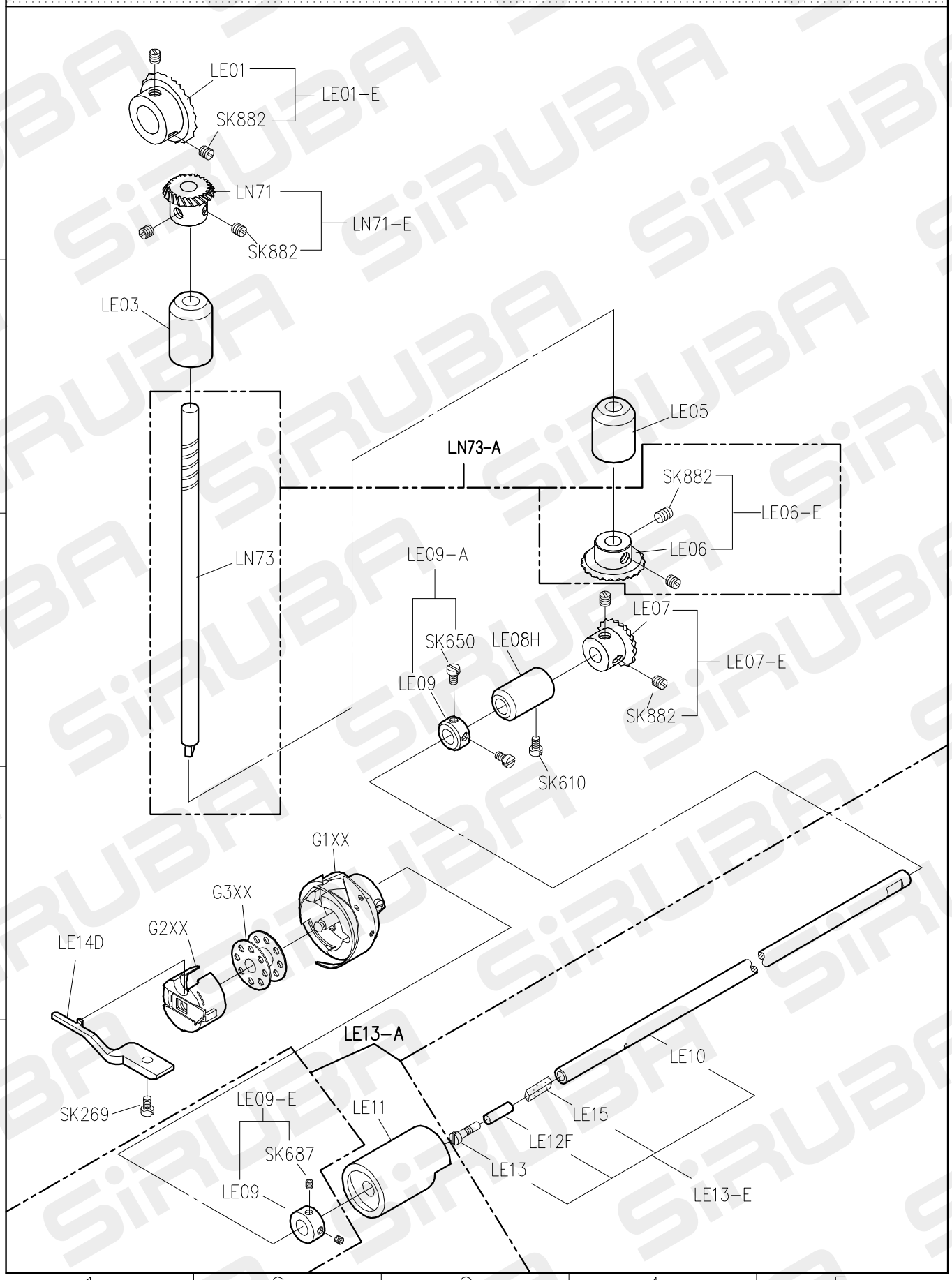

FOR L818F-NF

10.02.07

L818F-NF PARTS LIST FOR LG GROUP

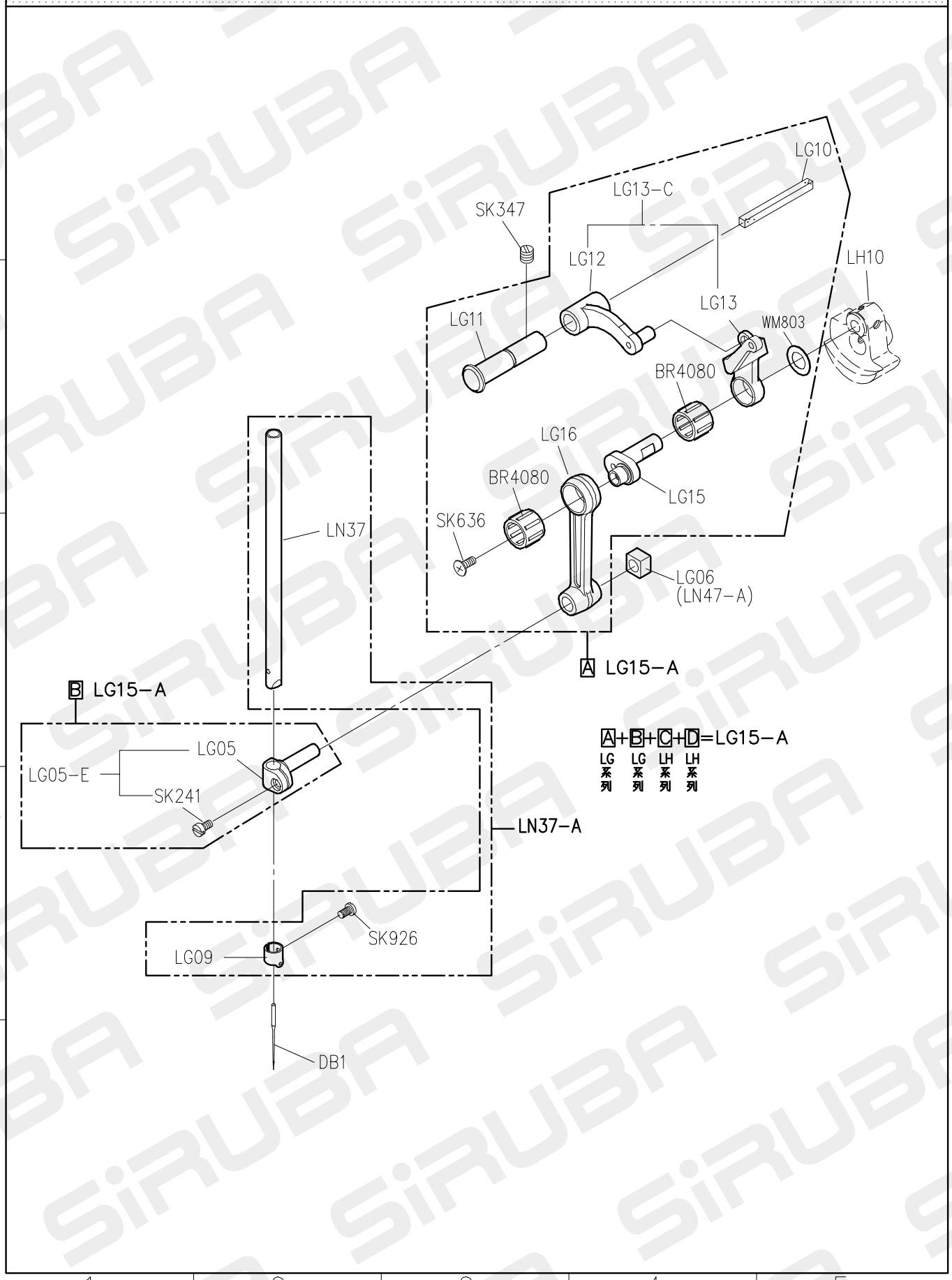

L818F-NF PARTS LIST FOR LH GROUP

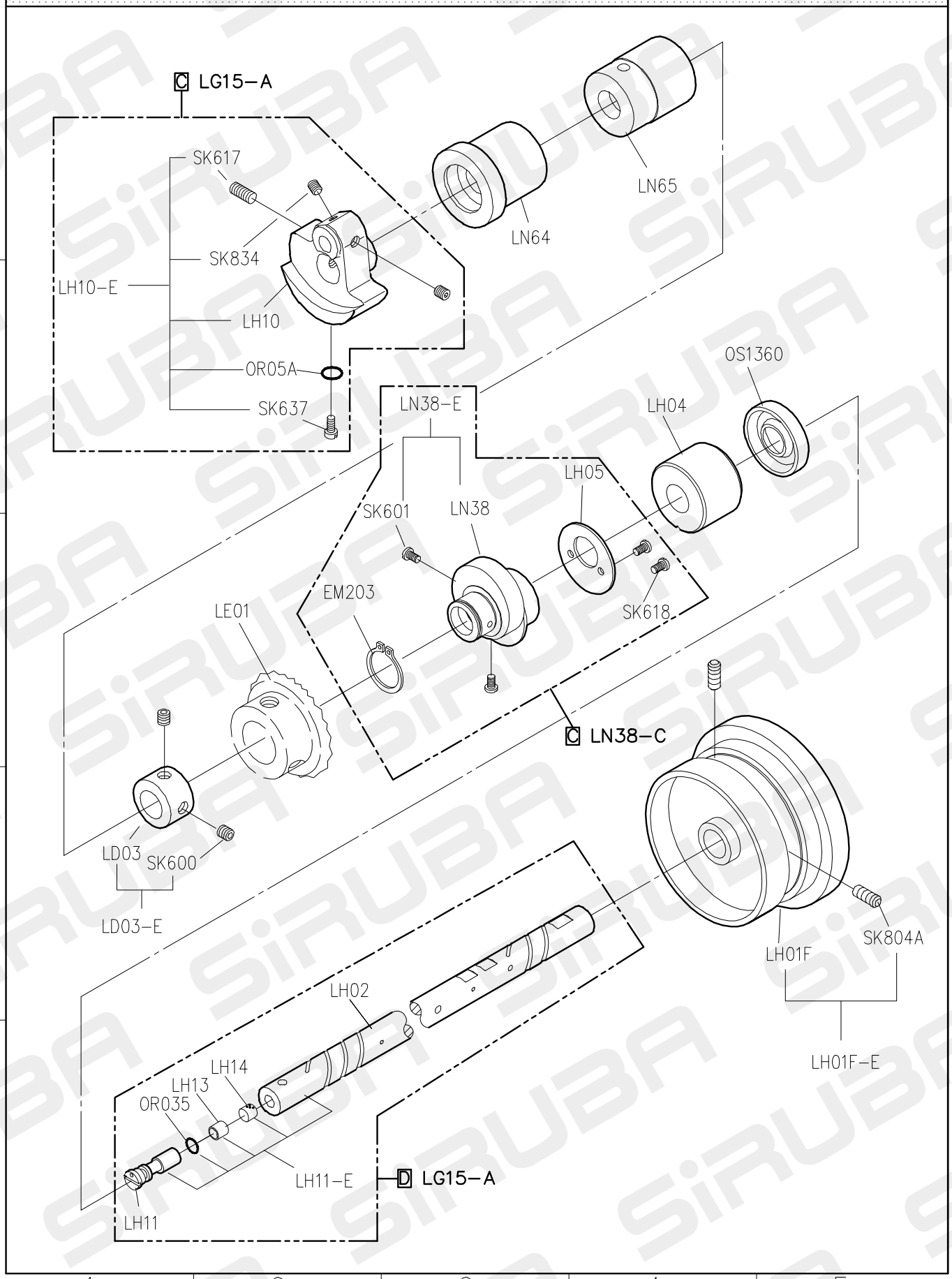

FOR L818F-NF

10.02.07

L818F-NF PARTS LIST FOR LL GROUP

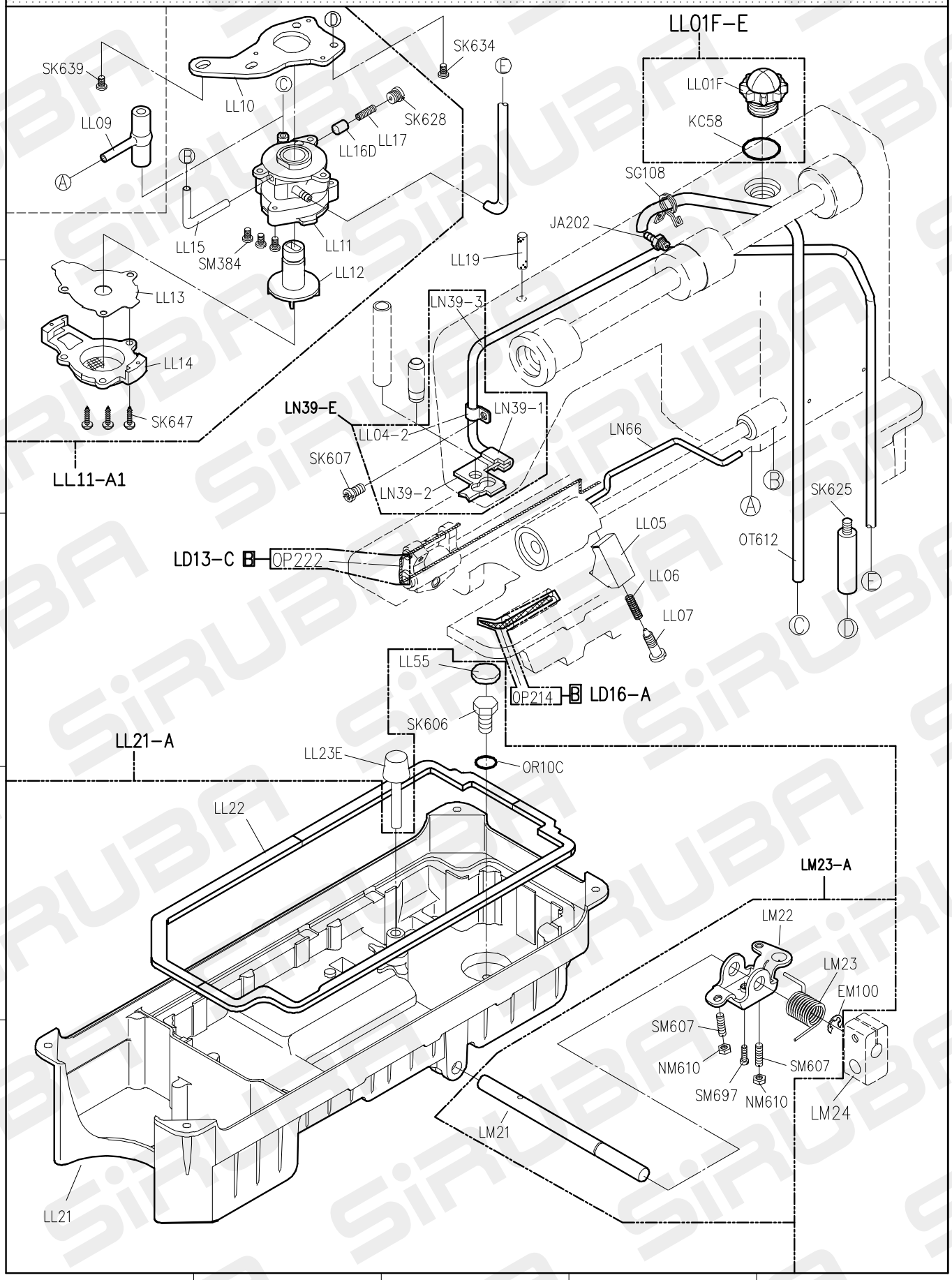

FOR L818F-NF

10.07.26

ALL-L818F PARTS LIST FOR LM GROUP

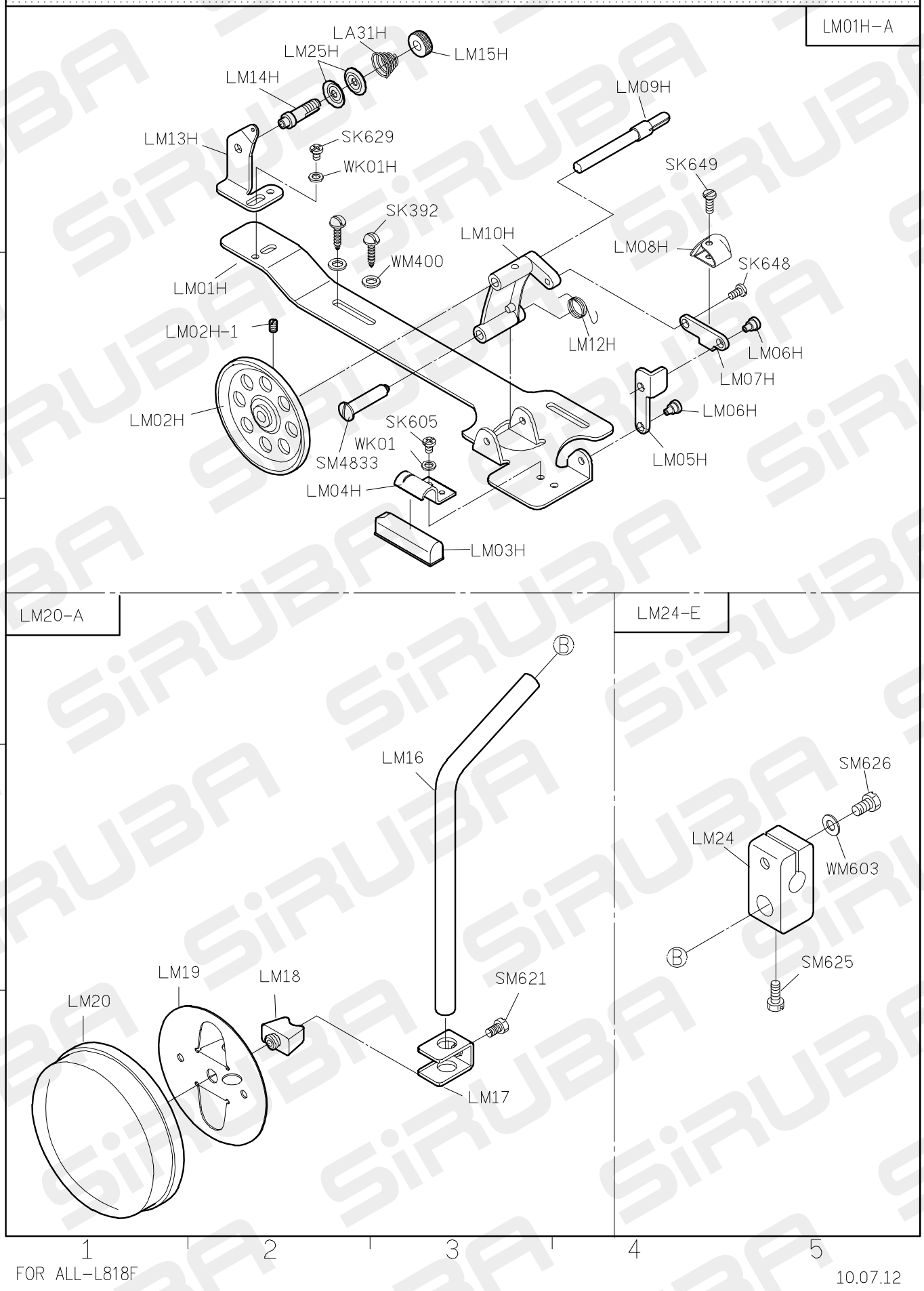

FOR ALL-L818F

10.07.12

L818F-NF PARTS LIST FOR LN GROUP

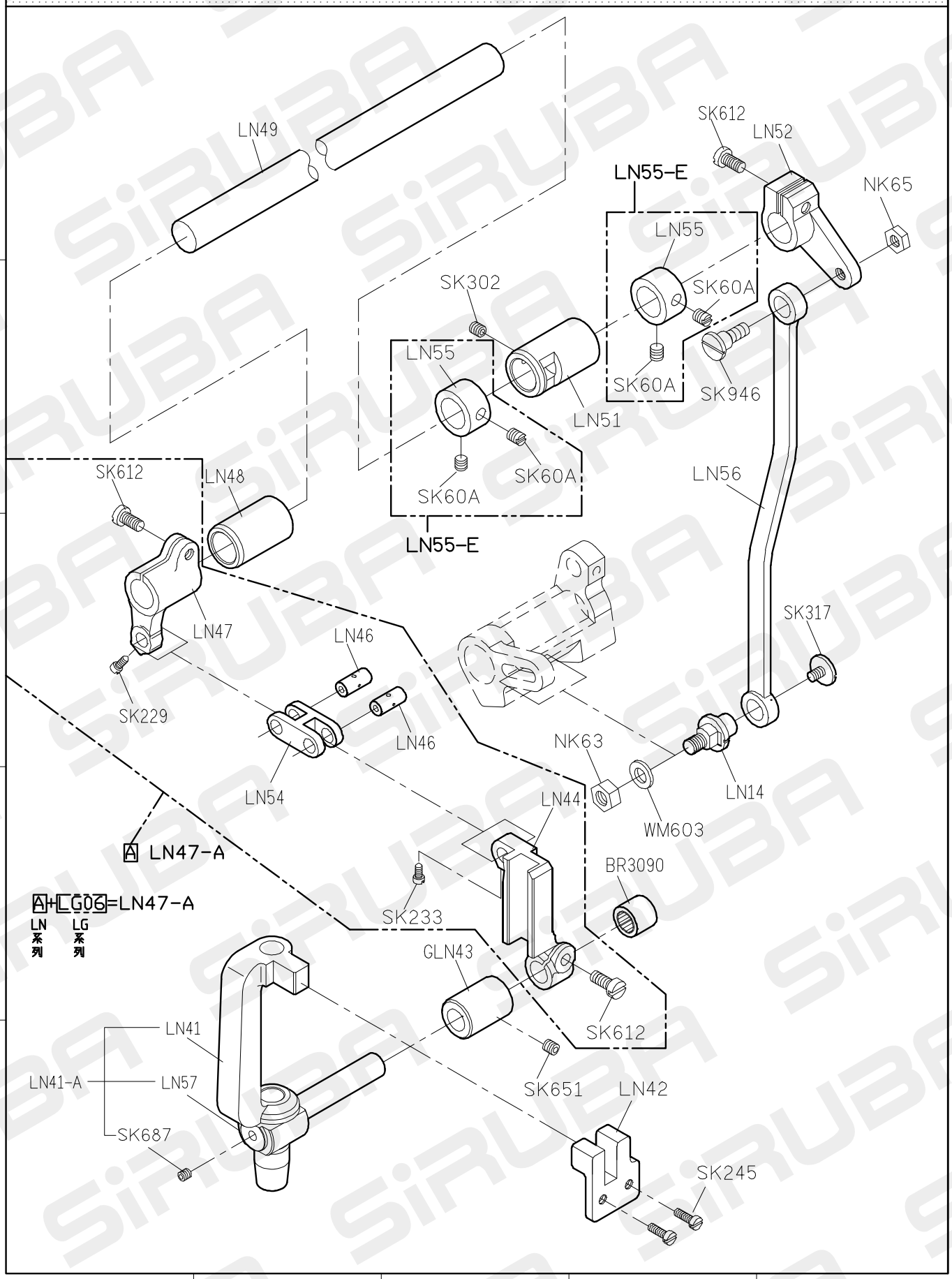

ALL-L818F PARTS LIST FOR LW GROUP

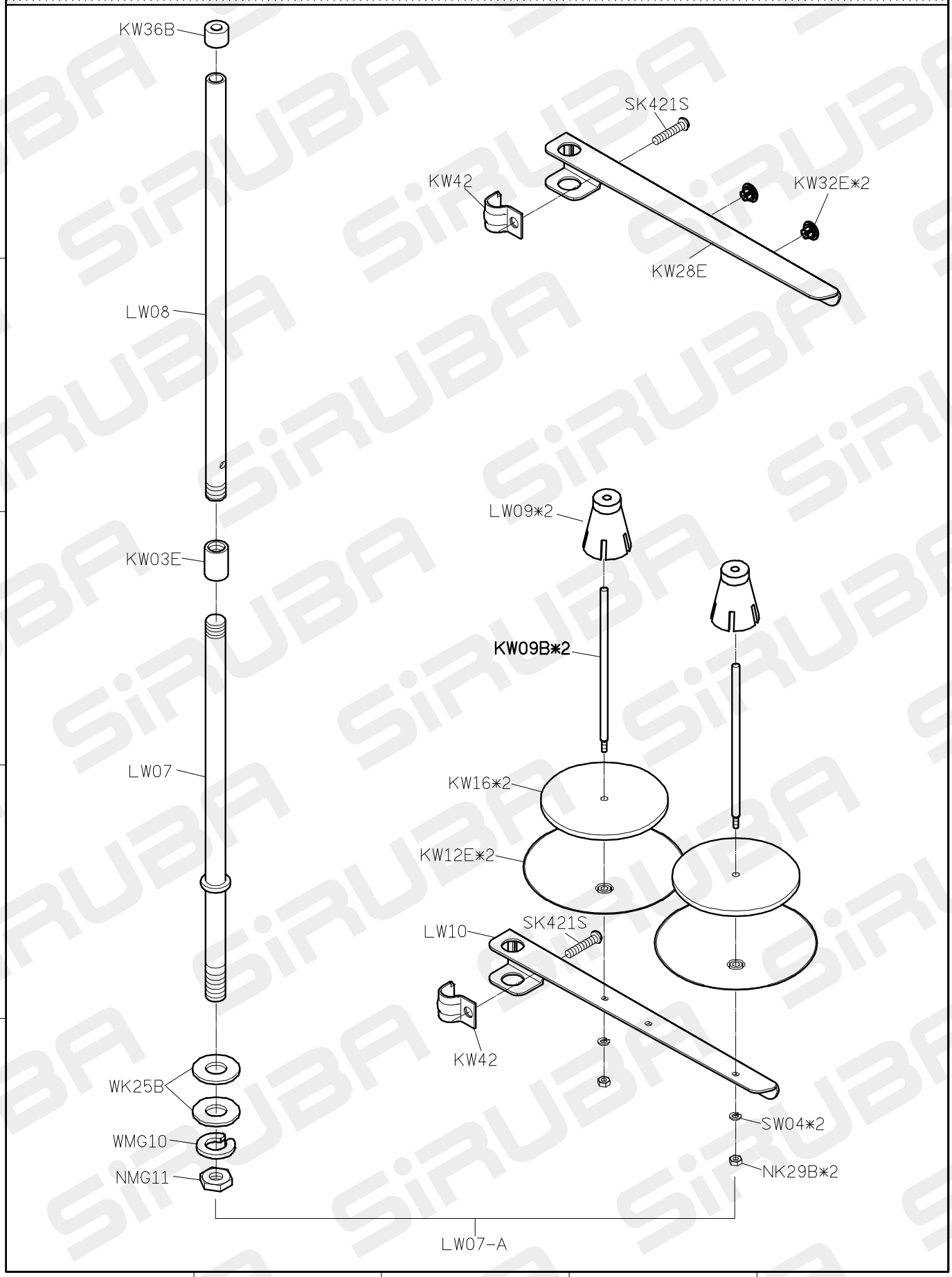

FOR ALL-L818F

10.02.07

L818F-NF PARTS LIST FOR LZ GROUP

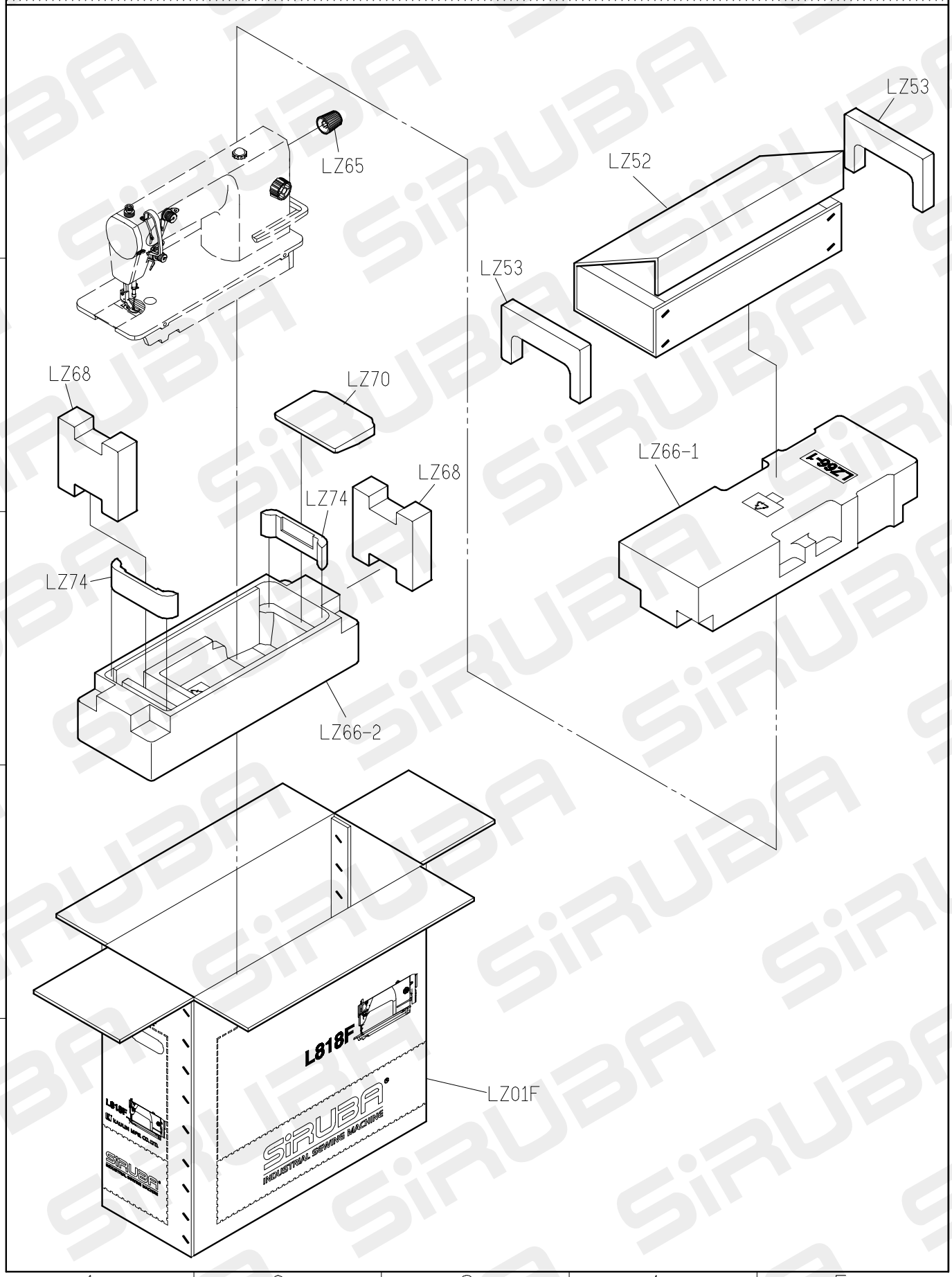

TABLE CUT-OUT OF L818F-T2

單針高速平縫下乘式車板圖
TABLE CUT-OUT SEMI-SUBMERGED
單位/UNIT:mm
所有尺寸公差/DIFFERENCE:±2
L818-T2-1070 長度(L):1070/重量:10kg±5%
L818-T2 長度(L):1200/重量:11.4kg±5%
全封邊灰格紋光塑面台板

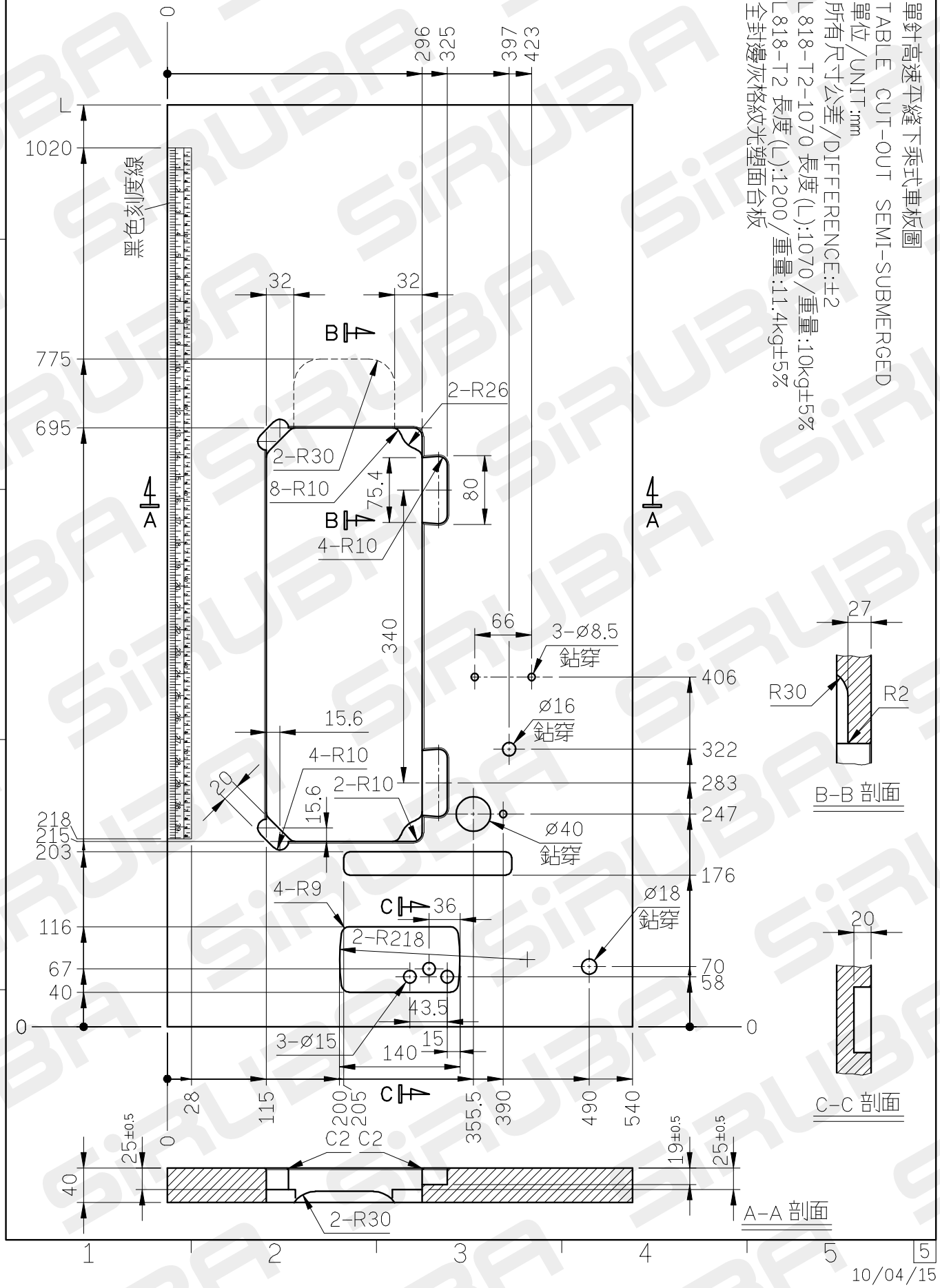

10/04/15

TABLE CUT-OUT OF L818F-T3
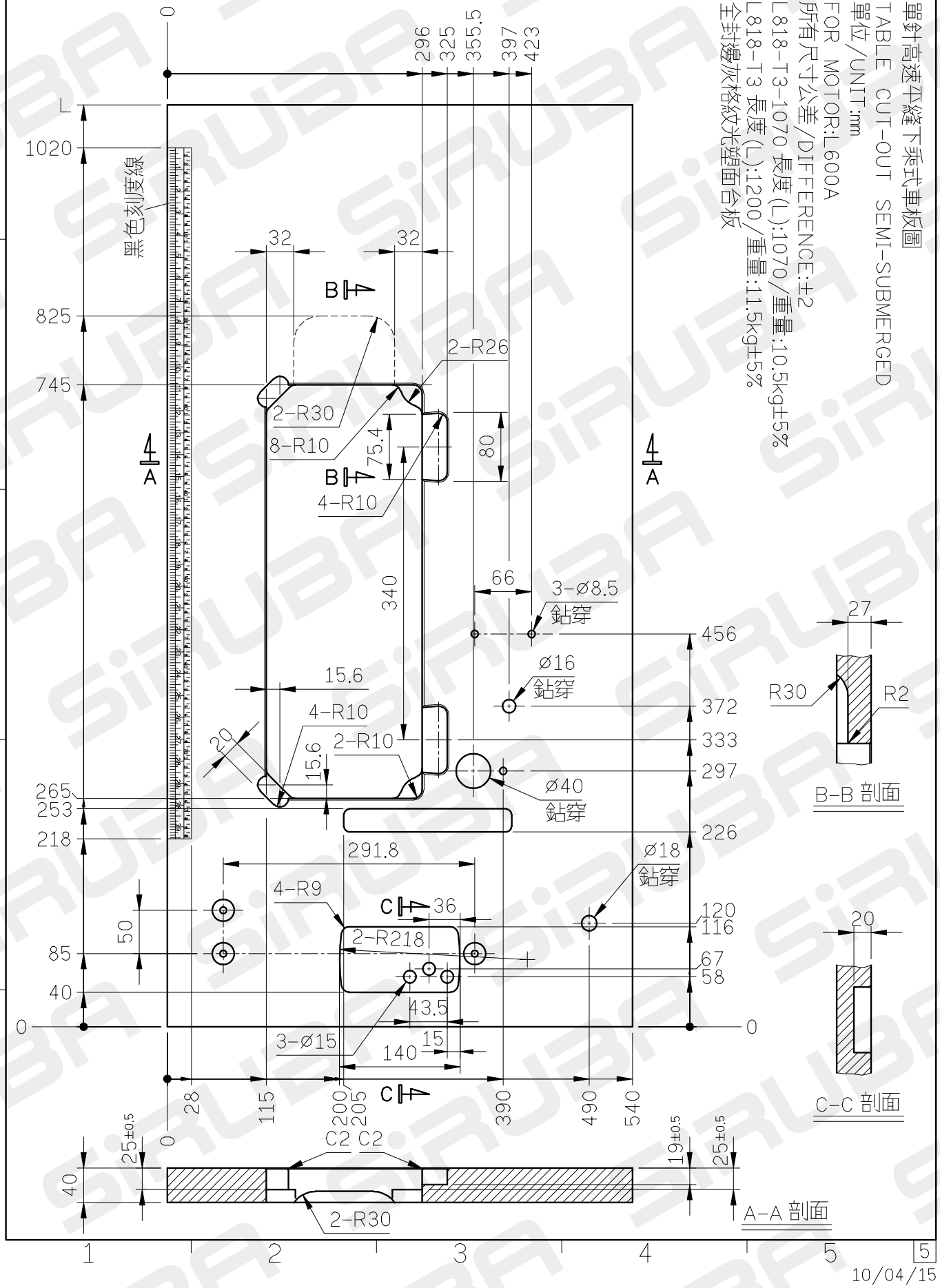
單針高速平縫下乘式車板圖
TABLE CUT-OUT SEMI-SUBMERGED
單位/UNIT:mm
FOR MOTOR:L600A
所有尺寸公差/DIFFERENCE:±2
L818-T3-1070 長度(L):1070/重量:10.5kg±5%
L818-T3 長度(L):1200/重量:11.5kg±5%
全封邊灰格紋光塑面台板