L818D基本型規格件表/CONVERSION CHART

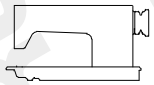		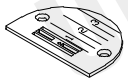	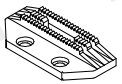	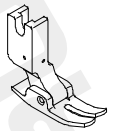	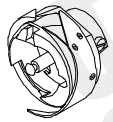	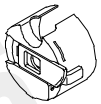		
MODEL	SUB-CLASS	NEEDLE PLATE	FEED DOG	PRESSER FOOT	HOOK ASM	BOBBIN CASE ASM	BOBBIN	NEEDLE
機 型	規 格	針 板	送 具	押 具	梭 頭	梭 殼	梭 子	針 號
L818D-L1	薄布料 / light weight material	E701	D701	P721	G111C	G201C	G303	DAX1#9
L818D-M1	薄至中厚布料 / from light weight material to medium wei--ght material	E704	D701	P701	G111C	G201C	G301	DBX1#14
L818D-HM1								
L818D-M1A		E704D	D702					
L818D-M1C								
L818D-HM1A								
L818D-H1	中厚至厚布料 / from medium weight material to heavy wei--ght material	E711	D711	P711	G112C	G201C	G301	DBX1#21
L818D-H1A		E711D	D711D	P711D				
L818D-H1C								

09.11.28

L818D PARTS LIST FOR LA GROUP

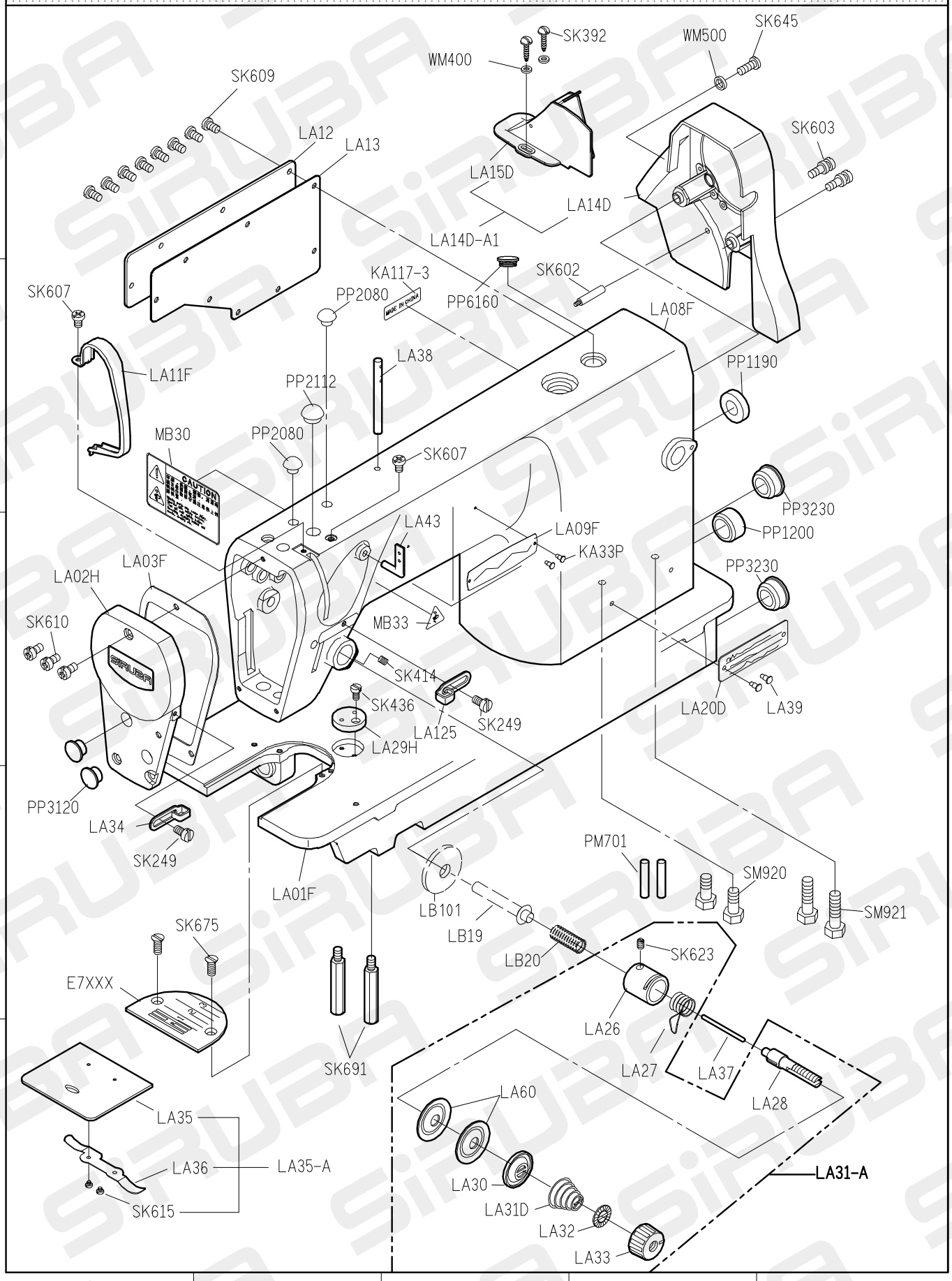

FOR L818D

10.08.09

L818D PARTS LIST FOR LB GROUP

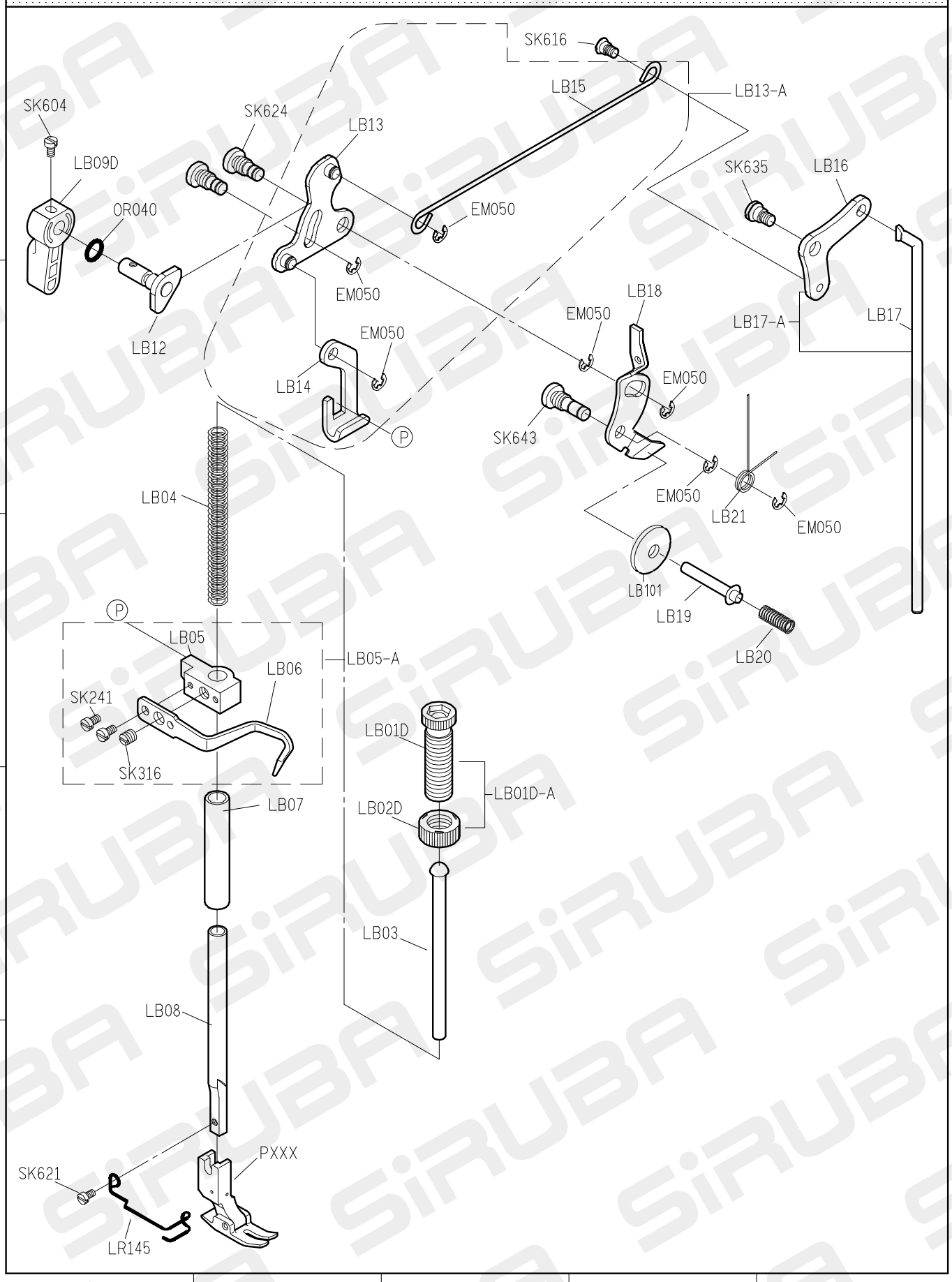

FOR L818D

10.08.09

L818D PARTS LIST FOR LC GROUP

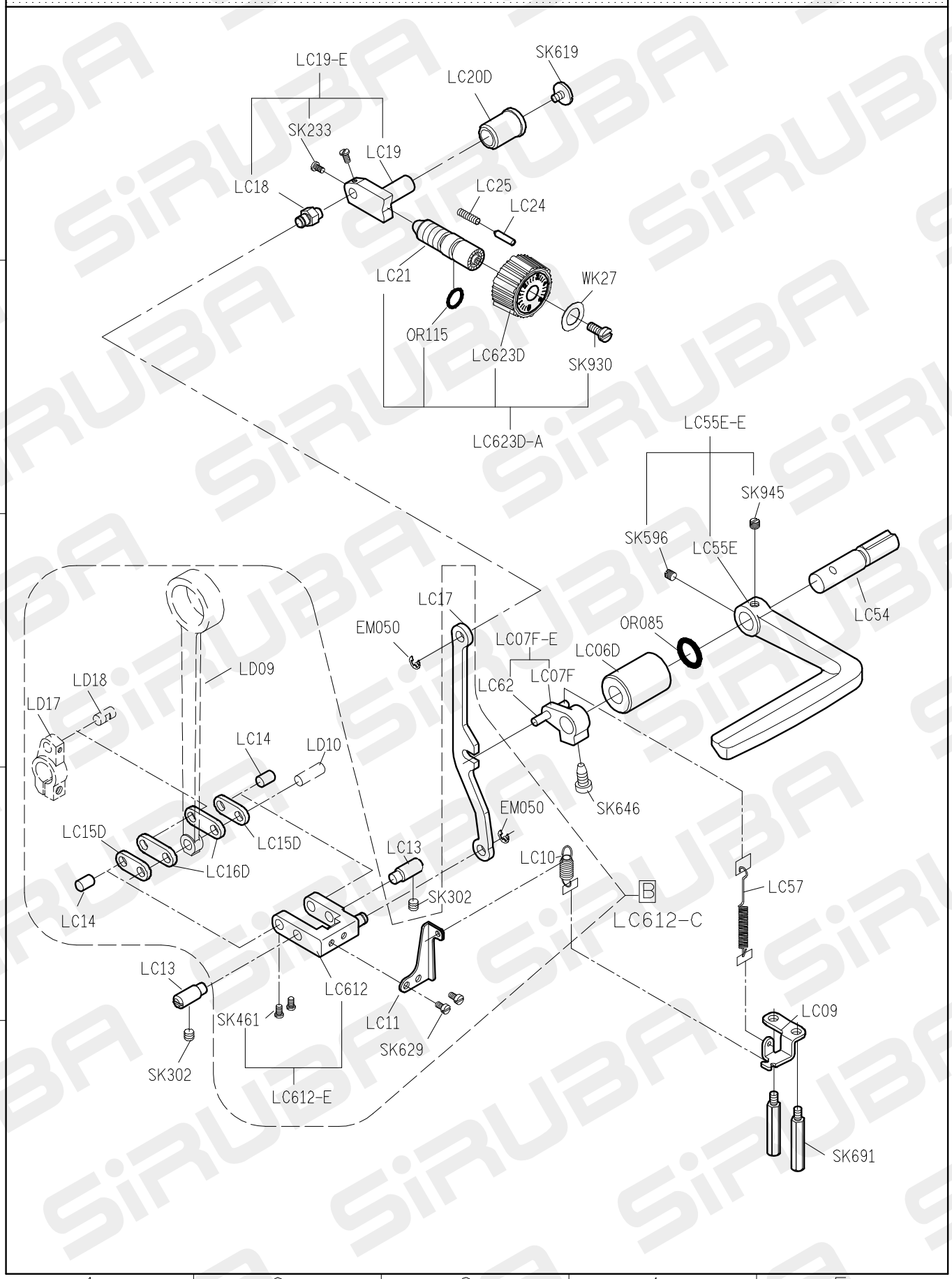

FOR L818D

09.11.30

L818D PARTS LIST FOR LD GROUP

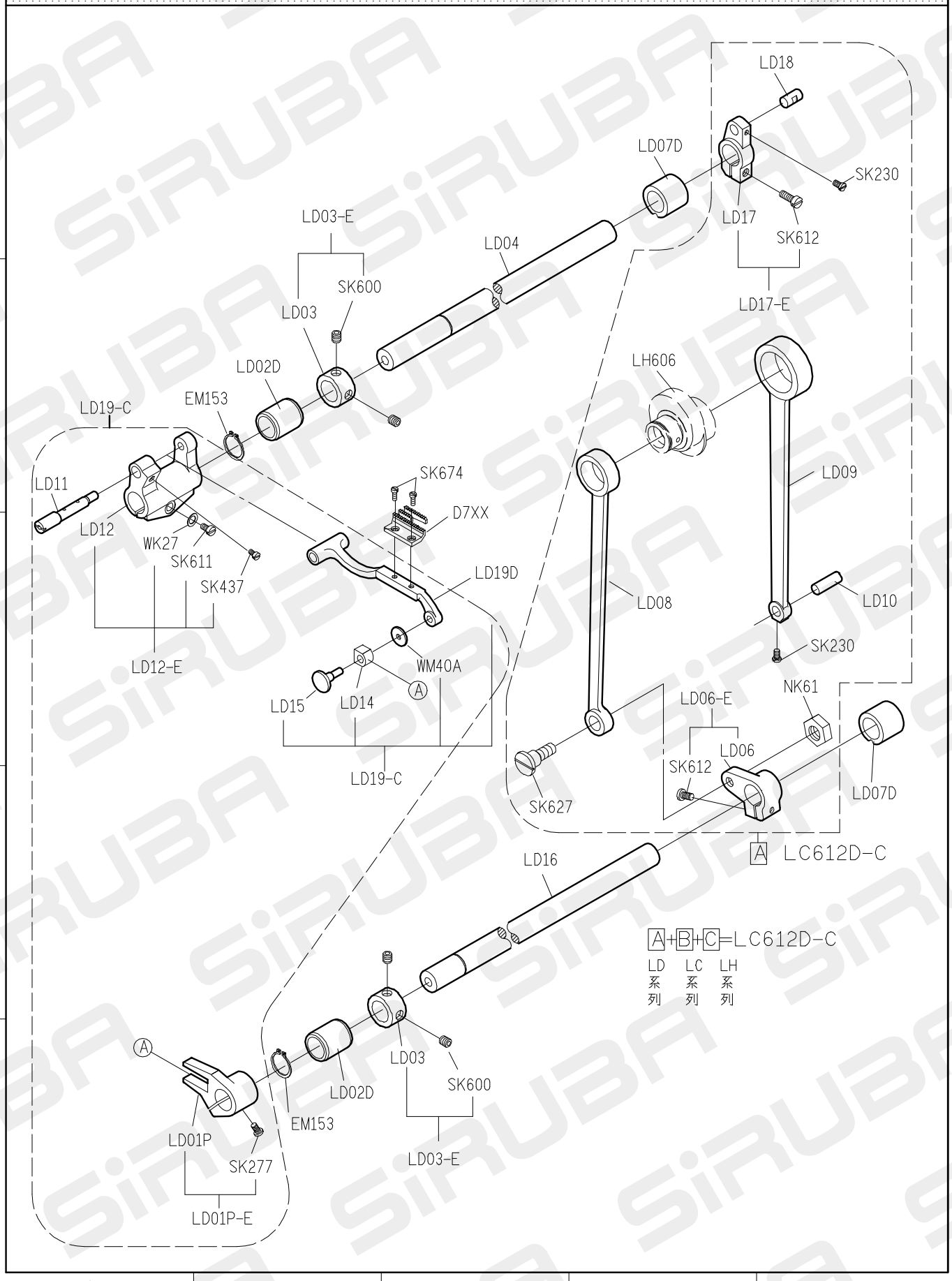

FOR L818D

10.07.14

L818D PARTS LIST FOR LE GROUP

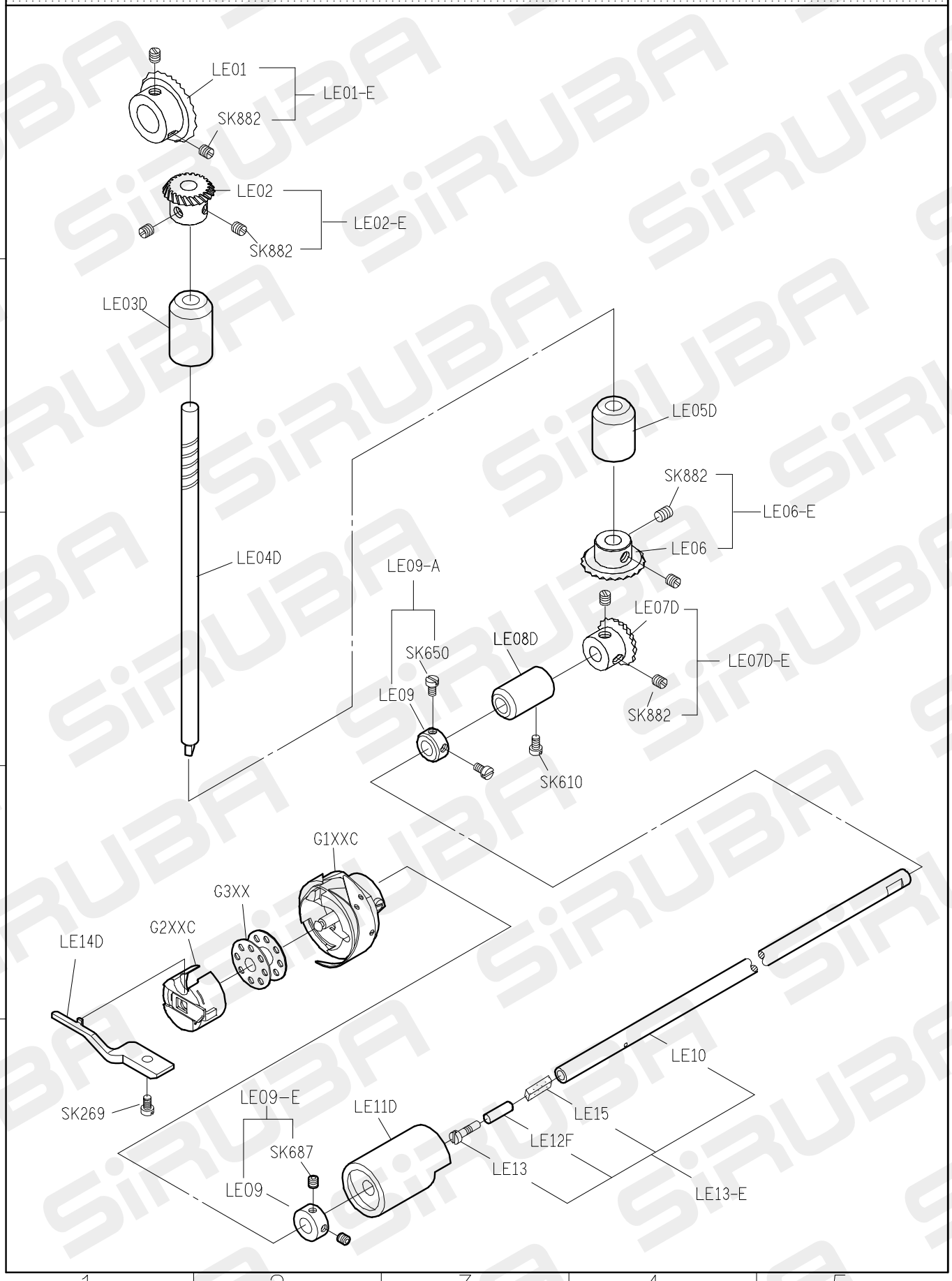

FOR L818D

09.11.30

L818D PARTS LIST FOR LG GROUP

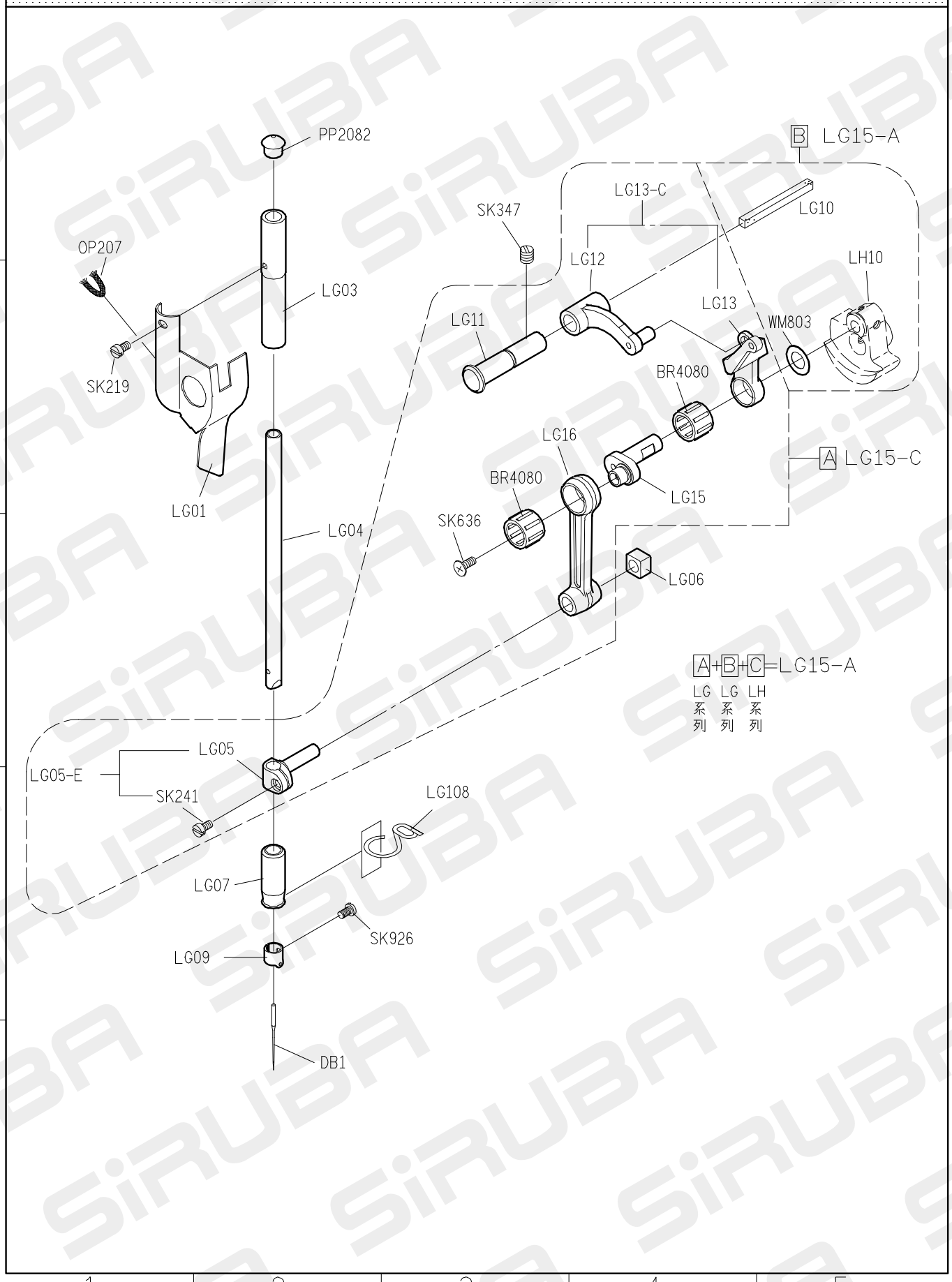

FOR L818D TRIMMER

10.07.14

L818D PARTS LIST FOR LH GROUP

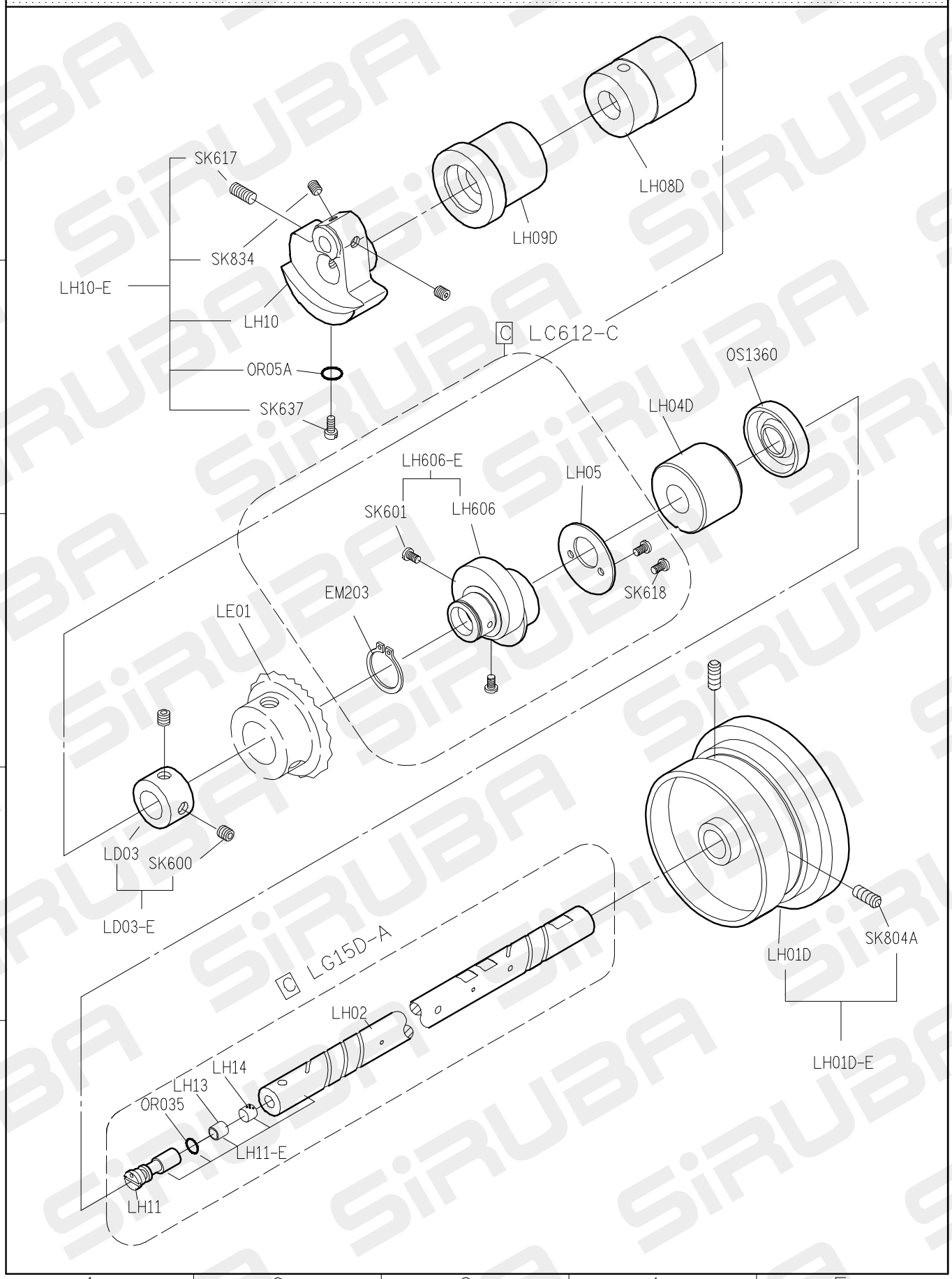

FOR L818D

09.11.30

L818D PARTS LIST FOR LL GROUP P.1/1

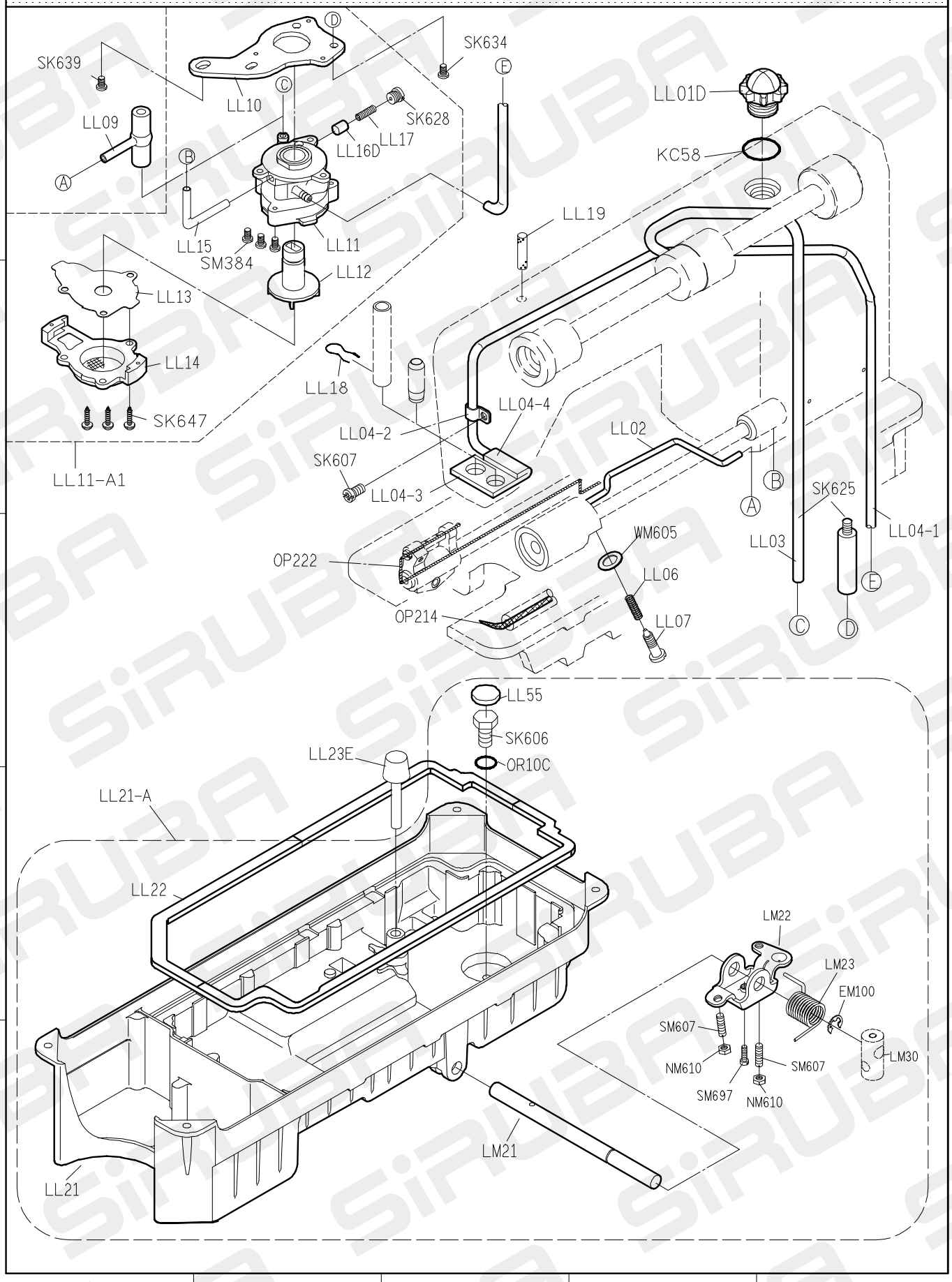

10.03.08

L818D PARTS LIST FOR LM GROUP

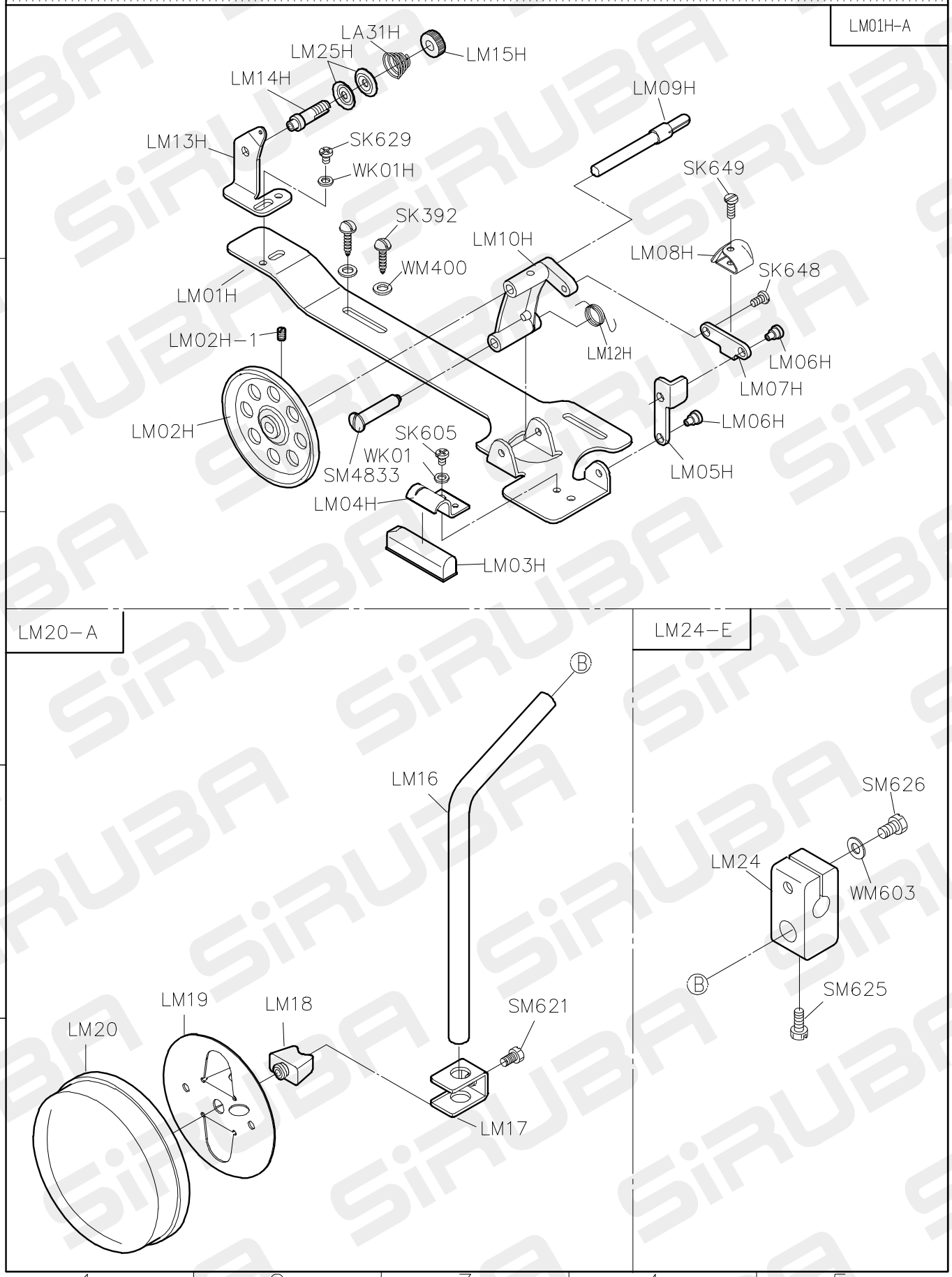

L818D PARTS LIST FOR LW GROUP

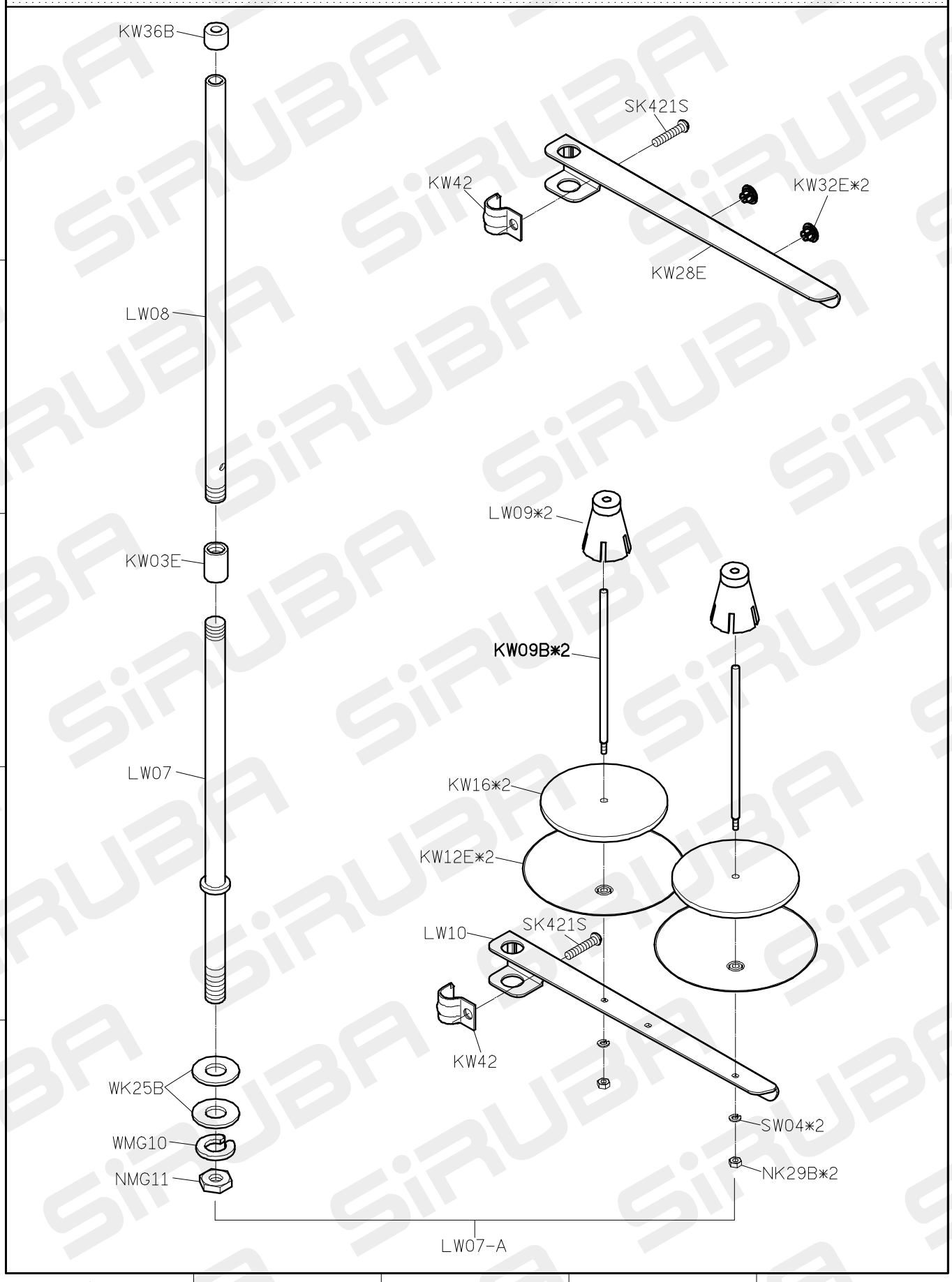

FOR ALL-L818D

09.11.30

L818D PARTS LIST FOR LZ GROUP

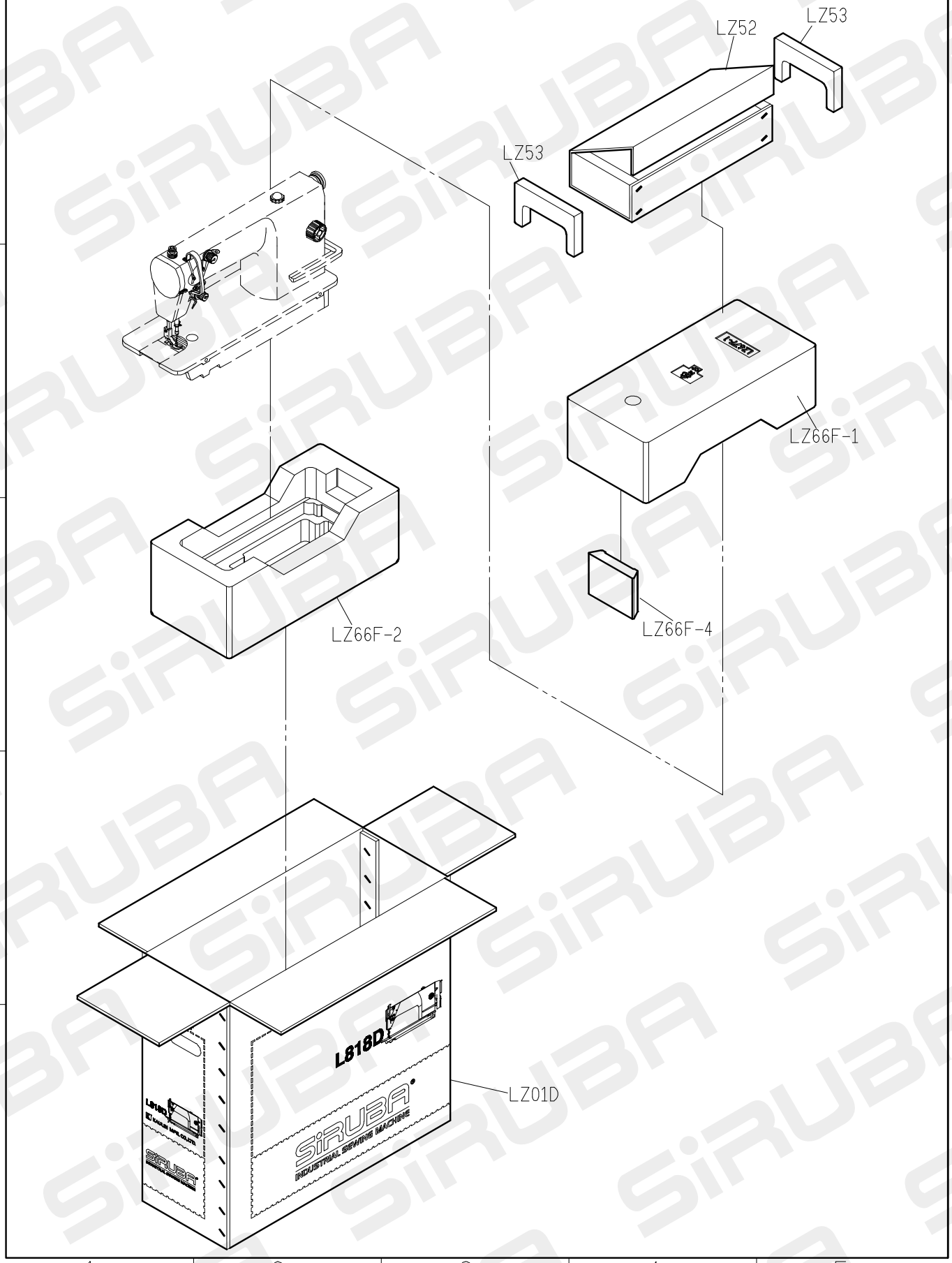

TABLE CUT-OUT OF L818F-T2

單針高速平縫下乘式車板圖
TABLE CUT-OUT SEMI-SUBMERGED
單位/UNIT:mm
所有尺寸公差/DIFFERENCE:±2
L818-T2-1070 長度(L):1070/重量:10kg±5%
L818-T2 長度(L):1200/重量:11.4kg±5%
全封邊灰格紋光塑面台板

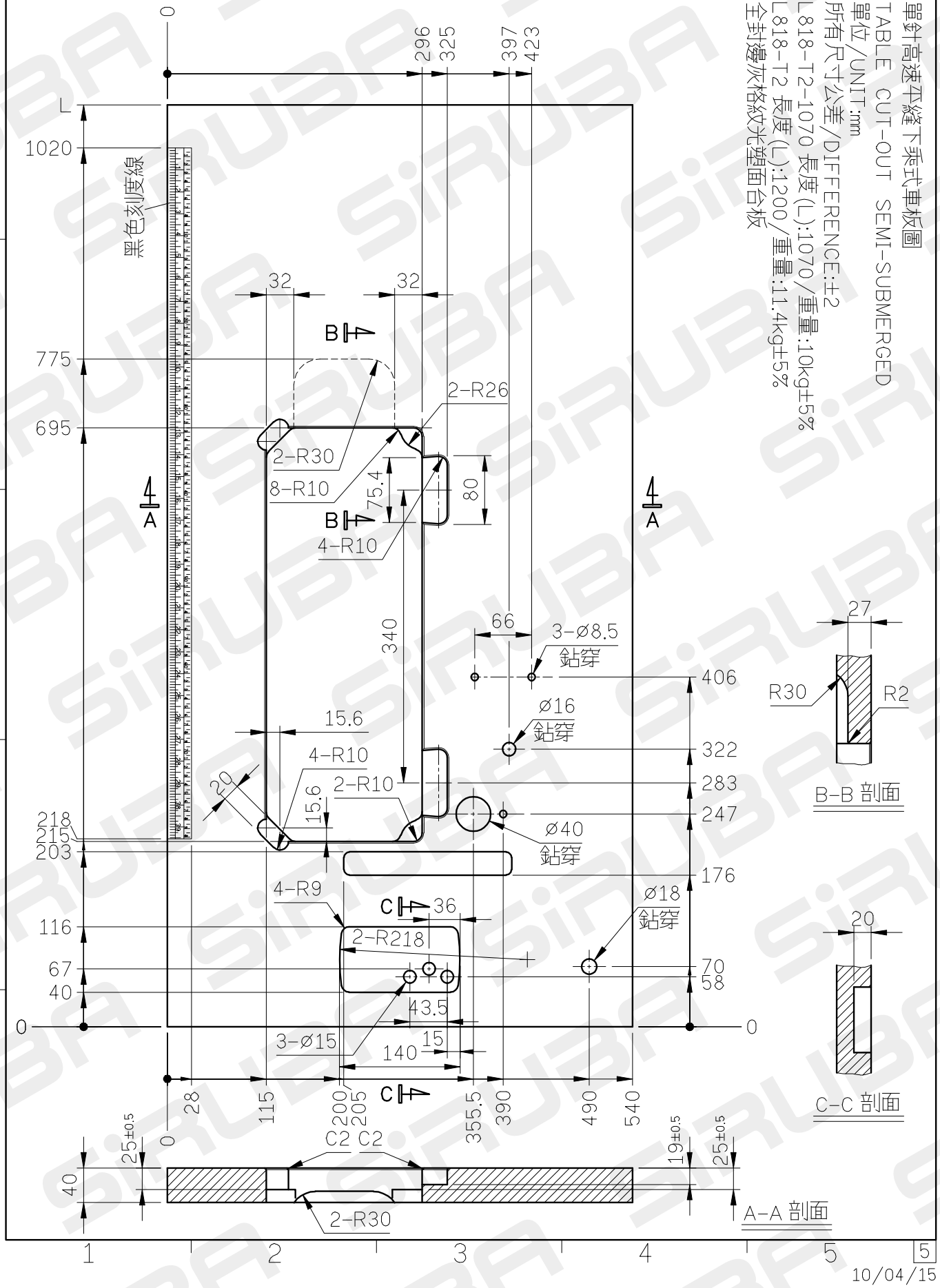

10/04/15

TABLE CUT-OUT OF L818F-T3
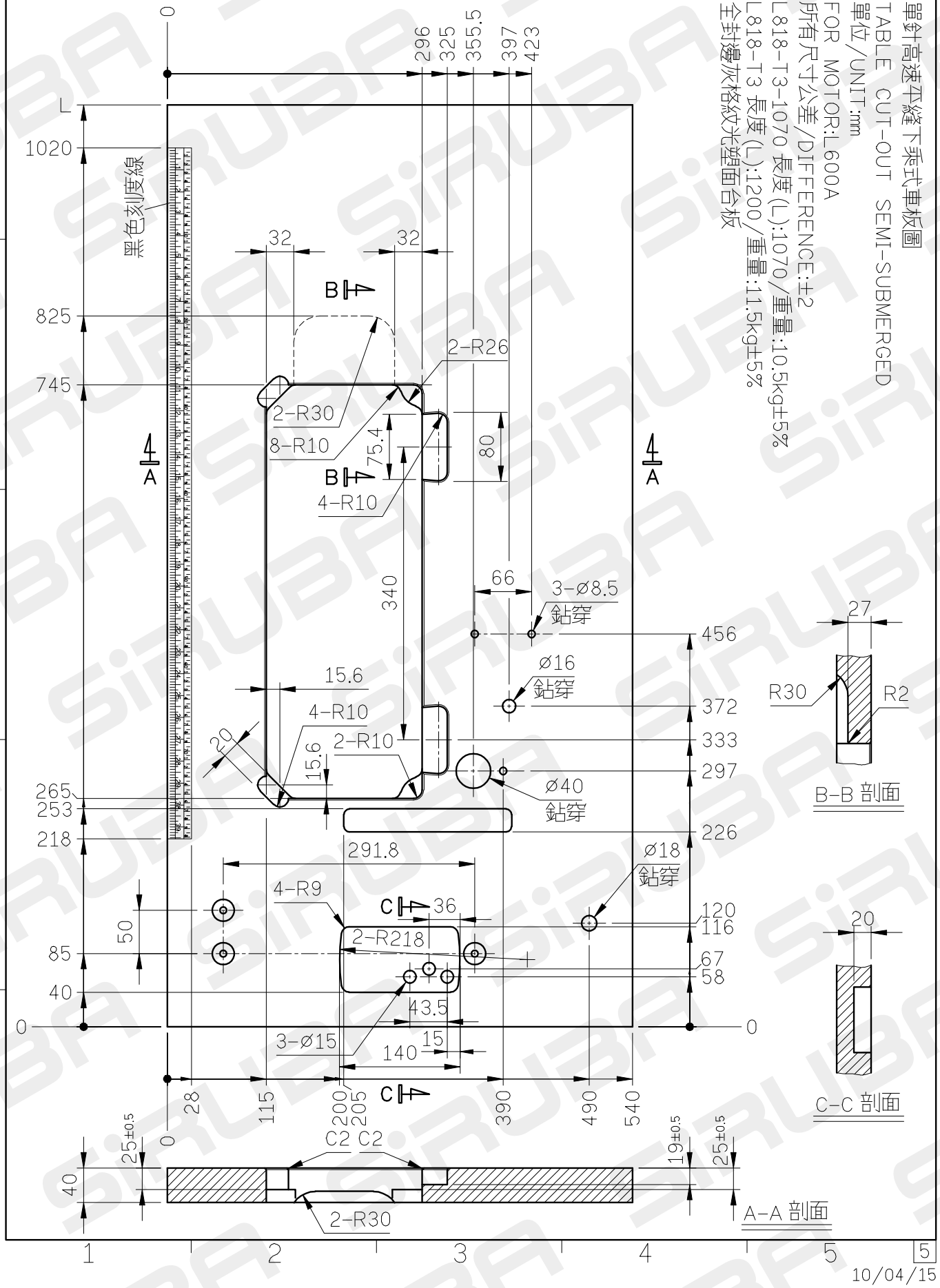
單針高速平縫下乘式車板圖
TABLE CUT-OUT SEMI-SUBMERGED
單位/UNIT:mm
FOR MOTOR:L600A
所有尺寸公差/DIFFERENCE:±2
L818-T3-1070 長度(L):1070/重量:10.5kg±5%
L818-T3 長度(L):1200/重量:11.5kg±5%
全封邊灰格紋光塑面台板