SiRUBA®

銀箭牌工業用縫紉機

INDUSTRIAL SEWING MACHINE

FA007

使用說明與零件圖
INSTRUCTION AND PARTS LIST

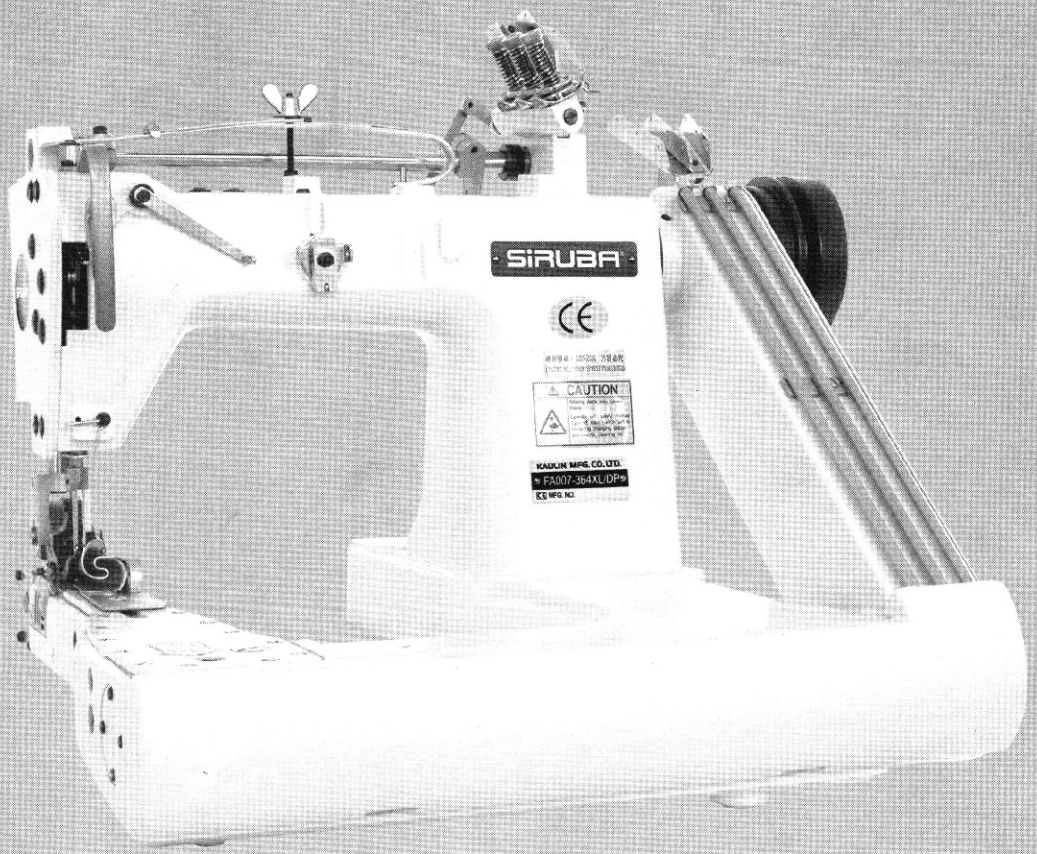

CE

高林股份有限公司
KAULIN MFG. CO., LTD.

CONTENTS 目錄

CO-MACHINE BODY 1
機體下拉布輪

C1-UPPER SHAFT MACHANISM 3
上軸結構

C2-NEEDLE BAR MECHANISM-FEED MECHANISM 5
針柱與送布傳動結構

C3-PULLY MECHANISM 7
皮帶傳動結構

C4- PRESSER BAR MECHANISM 9
壓腳柱結構

C5-LOOPER MECHANISM 11
彎針傳動結構

C6-UPPER THREADING MECHANISM 13
上導線張力結構

C7-LOWER THREADING MECHANISM 15
下導線張力結構

C8-LOWER SHAFT MECHANISM-GAUGE PARTS 17
下軸結構與針位組

C9-GAUGE PARTS(SP) SP 19
針位組

C10-GAUGE PARTS (DP) DP 21
針位組

C11-PULLER DEVICE MECHANISM DP、SP 23
上拉布輪結構

C12-ACCESSORIES 25
配件

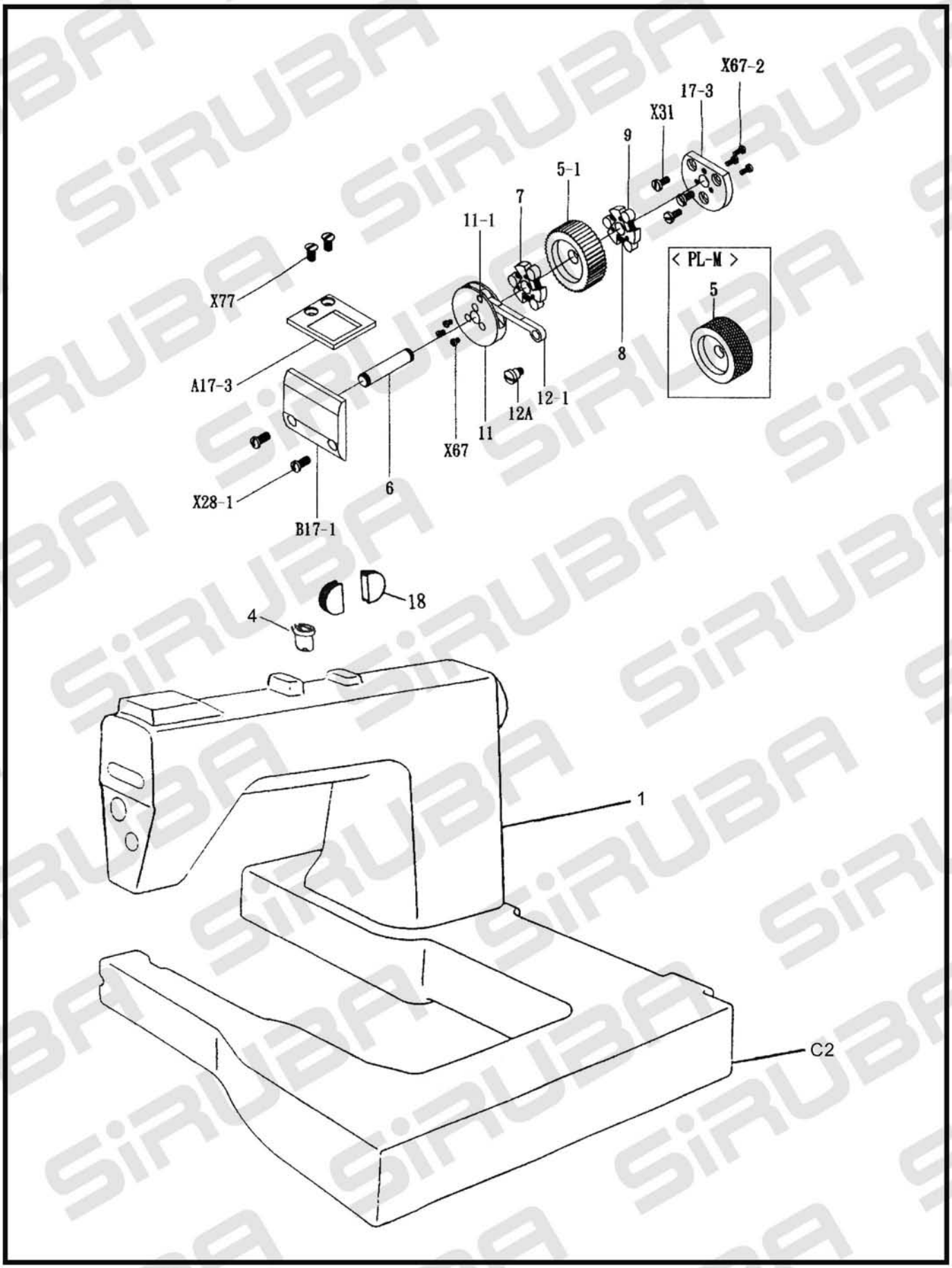
X67-2
17-3
X31
9
5-1
7
11-1
X77
< PL-M >
5
A17-3
8
12-1
12A
11
X67
X28-1
6
B17-1
18
4
1
C2

MACHINE BODY

REF. NO.部件編號	NAME OF PARTS 說明	Amt req需求量
C0-01	MACHINE HEAD 機體(上)	1
C0-C2	MACHINE REST BOARD 機體(下)	1
C0-04	OIL PLUG 油塞	1
C0-05	LOWER WHEEL 拉布輪	1
C0-05-1	LOWER WHEEL 拉布輪	1
C0-06	LOWER WHEEL CONNECTION 拉布輪軸	1
C0-07	ONE WAY TRIANGULAR AXLE 單向三向軸片	2
C0-08	ONE WAY STILL SPRING 單向彈簧	6
C0-09	ONE WAY STILL BALL 單向滾珠	6
C0-11	ONE WAY PUSHING PLATE 單向推輪	1
C0-11-1	PIN 銷	1
C0-12-1	FEED DOG PUSHING PLATE LINK 推輪連桿	1
C0-12A	SCREW 合葉螺釘	1
C0-B17-1	PULLER COVER 導蓋(右)	1
C0-A17-3	PULLER TOP COVER 護輪蓋	1
C0-17-3	PACKING 導蓋	1
C0-18	PLASTIC COVER 橡膠塞	2
C0-X28-1	SCREW 11/64×40 螺釘	2
C0-X31	SCREW 9/64×40 L8 螺釘	3
C0-X67	SCREW 3/32×56 螺釘	3
C0-X67-2	SCREW 3/32×56 L6 螺釘	3
C0-X77	SCREW 11/64×40 L9 螺釘	2

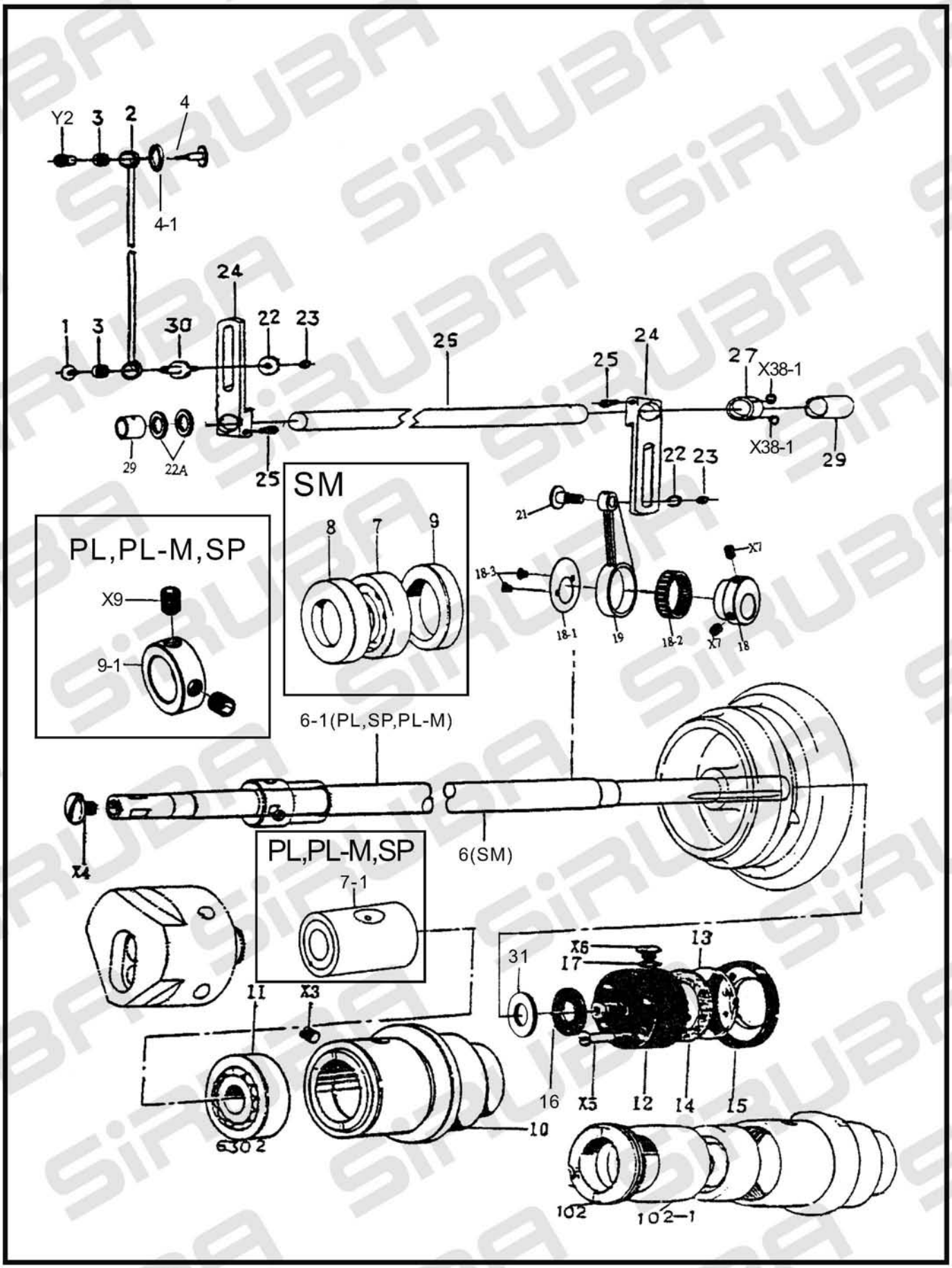
Y2
3
2
4
4-1
24
1
3
30
22
23
25
24
25
27
X38-1
X38-1
29
29
22A
25
22
23
21
SM
8
7
9
PL,PL-M,SP
X9
9-1
X7
18-3
18-1
19
18-2
X7
18
6-1(PL,SP,PL-M)
6(SM)
X4
PL,PL-M,SP
7-1
31
X6
17
13
11
X3
16
X5
12
14
15
10
6302
102
102-1

UPPER SHAFT MACHANISM

REF. NO.部件編號	NAME OF PARTS 說明	Amt req需求量
C1-01	PULL BAR ENDING SCREW 合葉螺釘	1
C1-02	VERTICAL PULL BAR 傳動連桿	1
C1-03	PULL BAR BEARING 滾柱軸承	2
C1-04	VERTICAL PULL BAR FIXING SCREW 合葉螺釘	1
C1-04-1	WASER 墊圈	1
C1-Y2	PULL BAR SCREW NUT 止動螺母	1
C1-06	UPPER SHAFT 上主軸	1
C1-06-1	UPPER SHAFT 上主軸	1
C1-07	BALL BEARING 6202 軸承	1
C1-08	BEARING SUPPORT 軸承圈	1
C1-09	OIL STOPPER 油封	1
C1-7-1	FIXING BUSHUNG 上軸套(前)	1
C1-9-1	CHOCK RING 定位圈	1
C1-10	BEARING CASE ASSEMBLY 軸套筒	1
C1-11	BEARING 6302 軸承	1
C1-12	OIL TANK 儲油器	1
C1-13	OILGAUGE WINDOW 油鏡	1
C1-14	PACKING 油封墊圈	1
C1-15	OIL GAUGE FLANGE 儲油器蓋	1
C1-16	OIL TANK PACKING 止油銅墊圈	1
C1-17	PACKING 橡膠墊圈	1
C1-18	UPPER WHEEL ECCENTRIC WHEEL 偏心凸輪	1
C1-18-1	ECCENTRIC WHEEL WASHER 凸輪蓋	1
C1-18-2	BEARING 滾柱軸承	1
C1-18-3	SCREW 9/64×40 螺釘	2
C1-19	UPPER WHEEL MOVING PULL BAR 凸輪傳動連桿	1
C1-21	PULL BAR SCREW NUT 合葉螺釘	1
C1-22	FIXING PULL BAR SCREW WASHER 止滑墊圈	2
C1-22A	WASHER 墊圈(厚PL，PL-M，SP)(薄PL，PL-M)	2
C1-23	PULL BARSCREW NUT 螺母	2
C1-24	THICKNESS ADJUSTING PULL BAR 擺動傳桿	2
C1-25	PULL BAR FIXING PULL BAR 螺釘	2
C1-26	UPPER WHEEL CONNECTION 傳動軸	1
C1-27	MOVABLE LEFT-RIGHT CHOCK RING 定位圈	1
C1-29	CONNECTION COPPER TUBE 銅套筒	2
C1-30	VERTICAL PULL BAR 雙頭合葉螺釘	1
C1-31	WASHER 墊圈	1
C1-102	BEARING FIXING SCREW 外牙螺母	1
C1-102-1	BEARING FIXING BUSHING 緊壓套筒	1
C1-X3	SCREW 15/64×28 螺釘	1
C1-X4	SCREW 15/64×28 螺釘	1
C1-X5	SCREW 9/64×40 螺釘	4
C1-x6	CAP SCREW 覆蓋螺釘	1
C1-X7	SCREW 1/4×28 螺釘	2
C1-X9	SCREW 15/64×28 螺釘	2
C1-X38-1	SCREW 11/64×40 螺釘	2

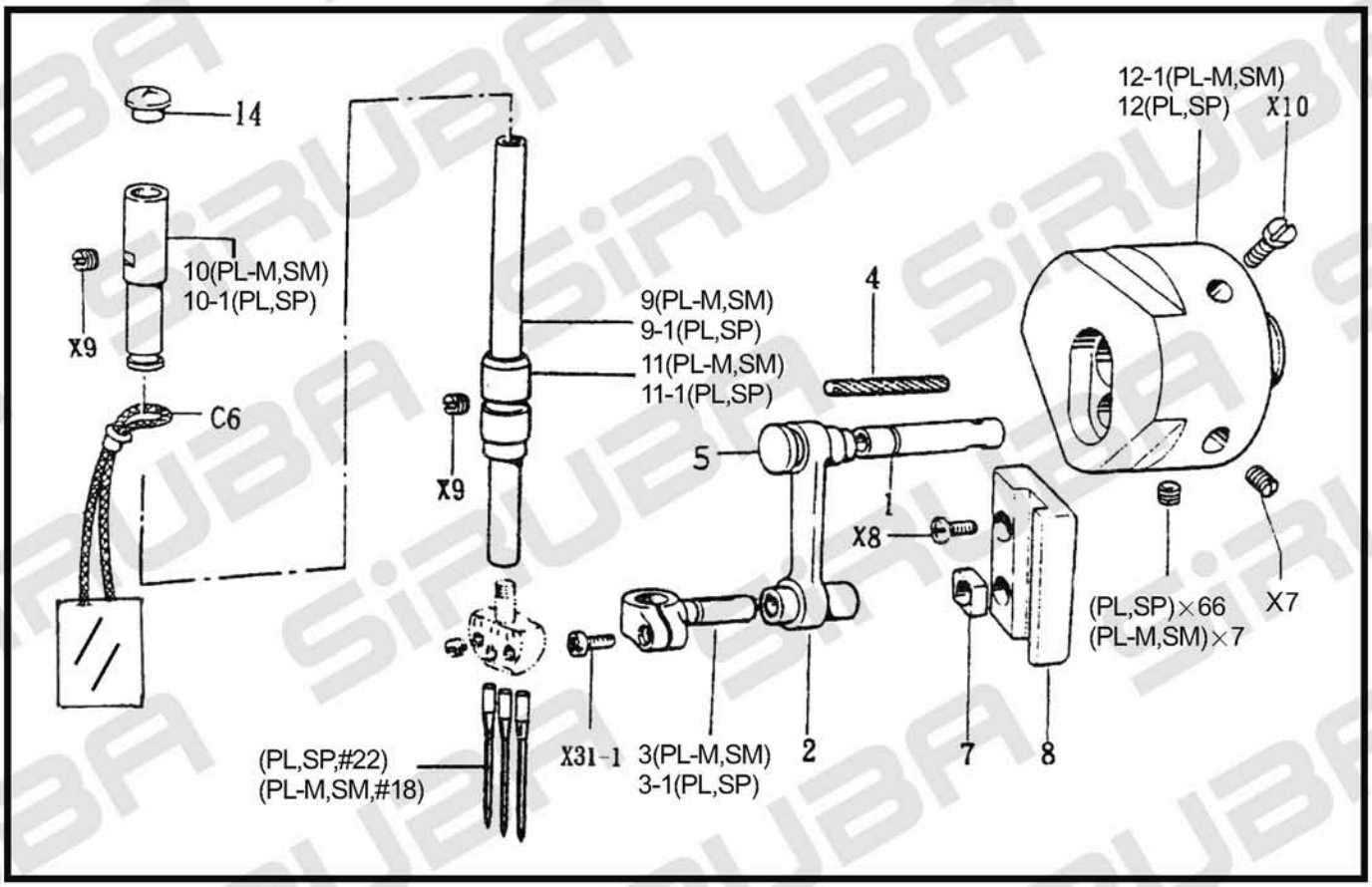
14
12-1(PL-M,SM)
12(PL,SP)
X10
10(PL-M,SM)
10-1(PL,SP)
X9
9(PL-M,SM)
9-1(PL,SP)
11(PL-M,SM)
11-1(PL,SP)
4
C6
X9
5
1
X8
(PL,SP)×66
(PL-M,SM)×7
X7
(PL,SP,#22)
(PL-M,SM,#18)
X31-1
3(PL-M,SM)
3-1(PL,SP)
2
7
8

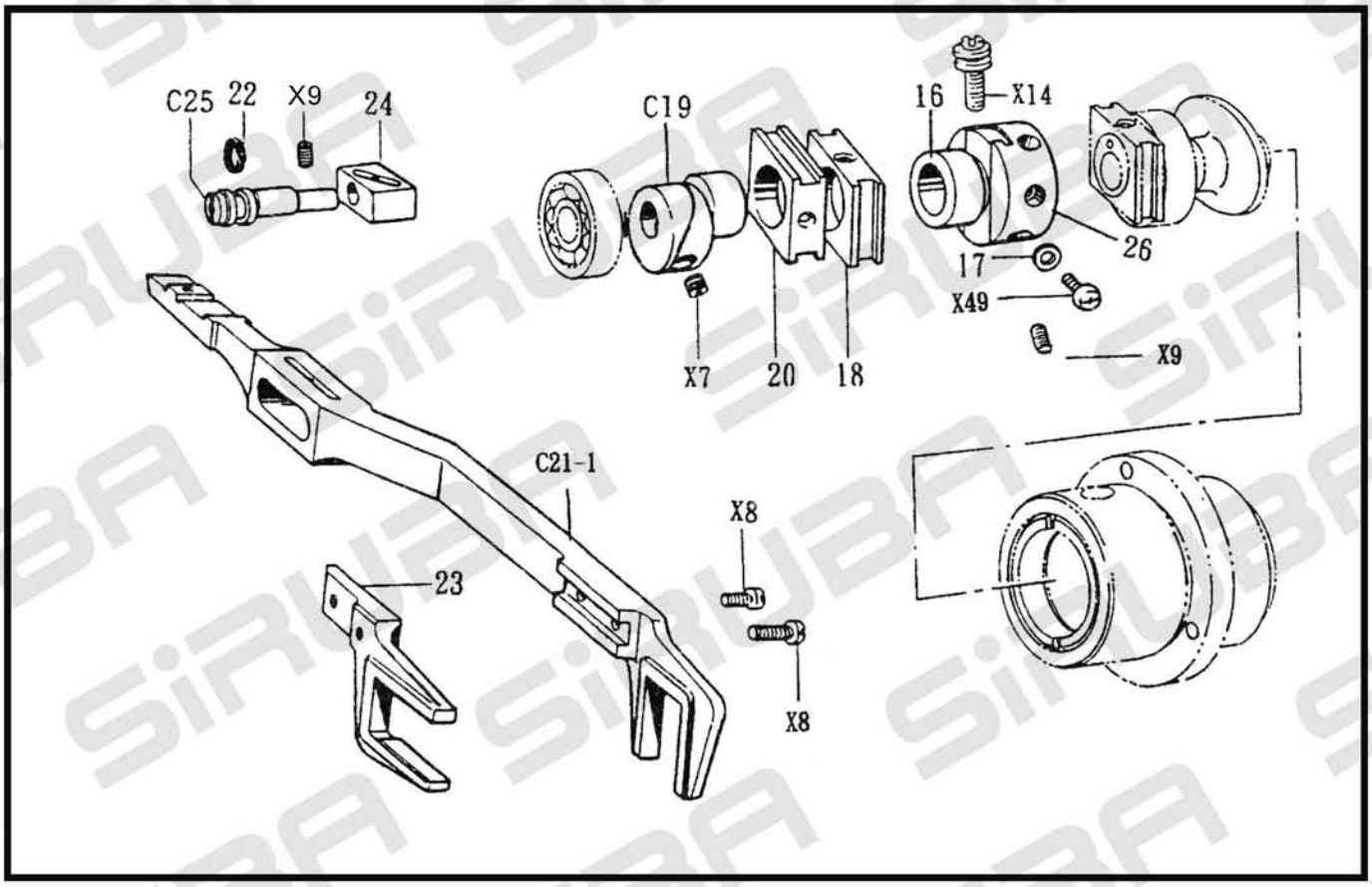
C25
22
X9
24
C19
16
X14
26
17
X49
X9
X7
20
18
C21-1
X8
23
X8

NEEDLE BAR MECHANISM-FEED MECHANISM

REF. NO.部件編號	NAME OF PARTS 說明	Amt req需求量
C2-01	NEEDLE BAR CRANK 固定軸	1
C2-02	NEEDLE BAR CRANK BOD 提升連桿	1
C2-03	NEEDLE BAR BRACKET 針柱夾	1
C2-03-1	NEEDLE BAR BRACKET 針柱夾	1
C2-04	WICK 油蕊	1
C2-05	OIL LEAK PROOF CAP 防油蓋	1
C2-C6	WICK 油蕊	1
C2-07	NEEDLE BAR GUIDE SLIDE BLOCK 四方滑塊	1
C2-08	NEEDLE BAR GUIDE 導軌	1
C2-09	NEEDLE BAR 針柱	1
C2-09-1	NEEDLE BAR 針柱	1
C2-10	NEEDLE BAR BUSHING (UPPER) 針柱套筒(上)	1
C2-10-1	NEEDLE BAR BUSHING (UPPER) 針柱套筒(上)	1
C2-11	NEEDLE BAR BUSHING (LOWER)針柱套筒(下)	1
C2-11-1	NEEDLE BAR BUSHING (LOWER)針柱套筒(下)	1
C2-12	THREAD TAKE-UP CRANK 平衡凸塊	1
C2-12-1	THREAD TAKE-UP CRANK 平衡凸塊	1
C2-14	OIL CAP 橡膠塞	1
C2-15	NEEDLE 針(PL，SP#22)(PL-M，SM#18)	3
C2-16	FEED DOG ECCENTRIC AXLE 調節凸輪	1
C2-17	WASHER 墊圈	1
C2-18	ECCENTRIC WHEEL SLEEVE 銅滑塊	1
C2-C19	ECCENTRIC WHEEL WITH SCREW 上下凸輪	1
C2-20	ECCENTRIC WHEEL SLEEVE 銅滑塊	1
C2-C21-1	FEED BAR SLIDE BLOCK ASSEMBLY 送布傳動曲柄	1
C2-22	PACKING 油封墊圈	1
C2-23	FEED LIFTING FORK 叉動柄	1
C2-24	FEED BAR SLIDE BLOCK ASSEMBLY 四方滑塊	1
C2-C25	FEED BAR ECCENTRIC SHAFT 偏心軸	1
C2-26	FEED DOG ECCENTRIC SET 固定座	1
C2-X7	SCREW1/4×40 螺釘	5
C2-X8	SCREW11/64×40 L12 螺釘	4
C2-X9	SCREW 15/64×28 螺釘	5
C2-X10	SCREW 15/64×28 螺釘	2
C2-X14	FEED ECCENTRIC ADJUSTING SCREW 倒位螺釘	1
C2-X31-1	SCREW 9/64×40 螺釘	1
C2-X49	SCREW 9/64×40 L5 螺釘	1
C2-X66	THREAD TAKE-UP CRANK 平衡凸塊	1

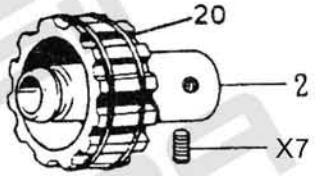
20
2
X7

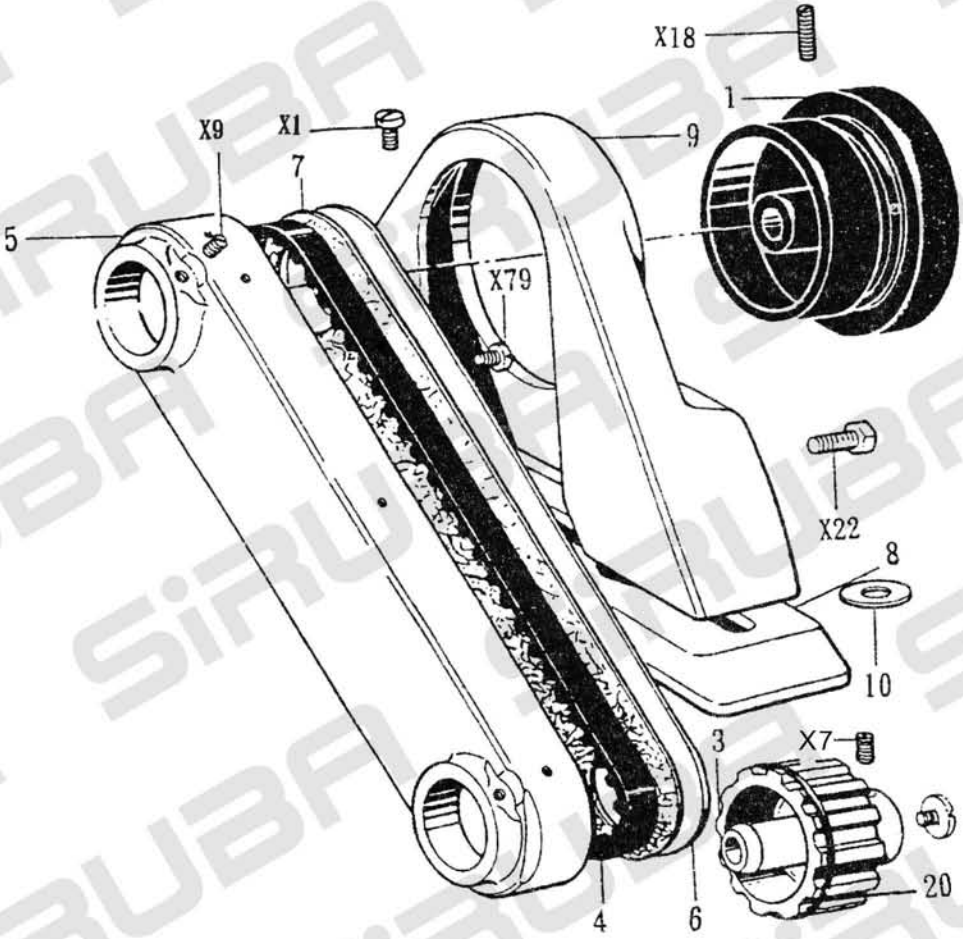
X18
1
X9
X1
9
7
5
X79
X22
8
10
3
X7
20
4
6

PULLY MECHANISM

REF. NO.部件編號	NAME OF PARTS 說明	Amt req需求量
C3-01	PULLEY 皮帶輪	1
C3-02	TIMING BELT WHEEL ASSEMBLY (SUPPER) 同步皮帶輪(上)	1
C3-03	TIMING BELT WHEEL ASSEMBLY (LOWER) 同步皮帶輪(下)	1
C3-04	TIMING BELT 同步時規皮帶	1
C3-05	BELT COVER 皮帶座	1
C3-06	BELT COVER PLATE 皮帶座蓋板	1
C3-07	PACKING 防油墊片	1
C3-08	PULLEY COVER BASE 配重固定塊	1
C3-09	PULLEY COVER 皮帶輪護蓋	1
C3-10	WASHER 墊圈	2
C3-20	SPRING COIL O型彈圈	3
C3-X01	SCREW1/4×28 螺釘	2
C3-X07	SCREW1/4×28 螺釘	5
X3-X09	SCREW1/4×28 螺釘	2
C3-X18	SCREW 15/64×28 螺釘	2
C3-X22	SCREW 7/16×14 螺釘	2
C3-X79	SCREW 3/16×32 L8 螺釘	2

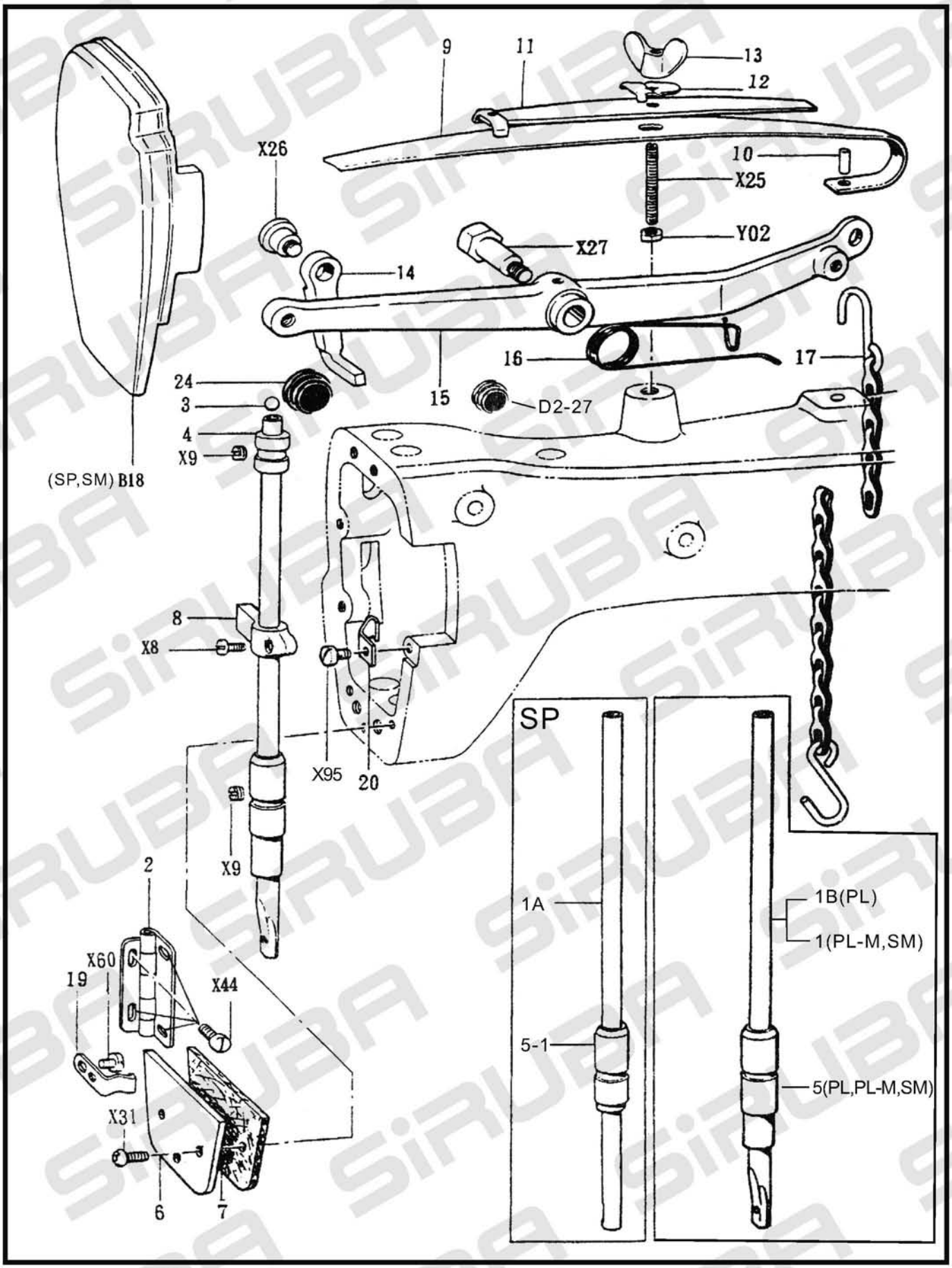
9
11
13
12
10
X25
X26
Y02
X27
14
16
17
24
3
15
D2-27
4
X9
(SP,SM) B18
8
X8
X95
20
X9
2
X60
19
X44
X31
6
7
SP
1A
5-1
1B(PL)
1(PL-M,SM)
5(PL,PL-M,SM)

PRESSER BAR MECHANISM

REF. NO.部件編號	NAME OF PARTS 說明	Amt req需求量
C4-01	PRESSR BAR 壓腳柱	1
C4-1A	PRESSR BAR 壓腳柱	1
C4-1B	PRESSR BAR 壓腳柱	1
C4-02	FACE PLATE UPPER HINGE ASSEMBLY 蝶型後鈕	1
C4-03	STEEL BALL 鋼珠	1
C4-04	PRESSER BAR BUSHING (UPPER) 壓腳柱軸套(上)	1
C4-05	PRESSER BAR BUSHING (LOWER) 壓腳柱軸套(下)	1
C4-5-1	PRESSER BAR BUSHING (LOWER) 壓腳柱軸套(下)	1
C4-06	FACE PLATE (LOWER) 前蓋板(下)	1
C4-07	PACKING 防油墊片	1
C4-08	PRESSER BAR CLAMP ASSEMBLY 壓腳柱夾	1
C4-09	PRESSER BAR CLAMP SPRING 壓力板	1
C4-10	PRESSER BAR CLAMP SPRING PIN 定位銷	1
C4-11	PRESSER BAR CLAMP SPRING ASSEMBLY 上壓力彈片	1
C4-12	GUIDE WASHER 定向墊片	1
C4-13	WING NUT 蝶型螺母	1
C4-14	PRESSER BAR LIFTER 壓腳提放勾	1
C4-15	KNEE LIFTER LEVER 壓腳提放柄	1
C4-16	KNEE LIFTER SPRING 壓腳提放彈簧	1
C4-17	PRESSER FOOT LIFTER CHAIN ASSEMBLY 傳動鏈條	1
C4-B18	FACE PLATE (UPPER) 前上蓋	1
C4-19	STOPPER SPRING PLATE (L) 彈片勾(外)	1
C4-20	STOPPER SPRING PLATE (S) 彈片勾(內)	1
C4-24	OIP CAP 油塞	1
C4-X8	SCREW11/64×40 螺釘	1
C4-X9	SCREW 15/64×28 螺釘	2
C4-X25	PRESSER ADJUSTING SCREW 全牙螺釘	1
C4-X26	STUD SCREW 15/64×28 螺釘	1
C4-X27	STUD SCREW 5/16×28 螺釘	1
C4-X31	SCREW 9/64×40 L10 螺釘	3
C4-X44	SCREW 9/64×40 螺釘	4
C4-X60	SCREW 9/64×40 螺釘	1
C4-X95	SCREW 9/64×40 螺釘	1
C4-Y02	SCREW 3/16×32 螺母	1
C4-D2-27	RUBBER PLUR 橡膠塞	1

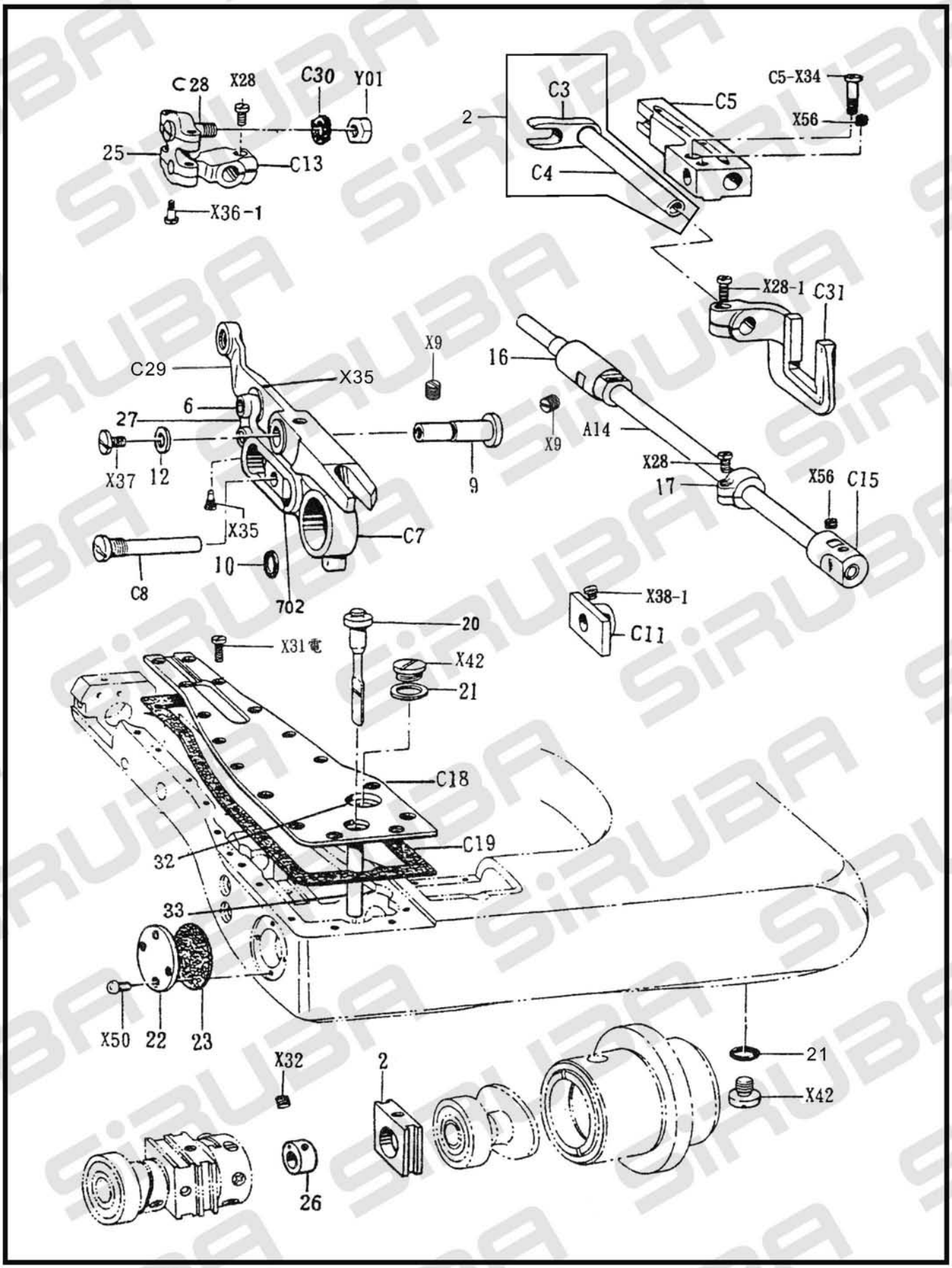
C28
X28
C30
Y01
25
C13
X36-1
2
C3
C4
C5
C5-X34
X56
X28-1
C31
C29
X35
6
27
X37
12
X9
9
16
A14
X9
X28
17
X56
C15
X35
C7
10
C8
702
X38-1
C11
20
X31電
X42
21
C18
C19
32
33
X50
22
23
X32
2
21
X42
26

LOOPER MECHANISM

REF. NO.部件編號	NAME OF PARTS 說明	Amt req需求量
C5-02	ECCENTRIC WHEEL SLEEVE 銅滑塊	1
C5-C3	LOOPER FEEDING FORK 滑動叉	1
C5-C4	LOOPER FEEDING SHAFT 滑動叉(軸)	1
C5-C5	LOPPER FEEDING SHAFT BRACKET 滑動叉基座	1
C5-06	PIN 叉銷	1
C5-C7	LOOPER FRONT-REAR TRANSMISSION 前後驅動連桿	1
C5-C8	SLIDE BROCK SHAFT 固定軸牙	1
C5-09	LOOPER LEVER SHAFT ?節固定軸	1
C5-10	PACKING 墊圈	1
C5-C11	CONNECTING ROD GUIDE PLATE 上下驅動連桿	1
C5-12	WASHER 墊圈	1
C5-C13	LOOPER SHAFT CLAMP 傳動軸夾	1
C5-A14	LOOPER SHAFT 傳動軸	1
C5-C15	LOOPER SHAFT BUSHING (F) 傳動軸套筒(後)	1
C5-16	LOOPER SHAFT BUSHING (B) 傳動軸套筒(前)	1
C5-17	SET COLLAR 定位夾	1
C5-C18	FORWARD ARM CONER ASSY 平面蓋板	1
C5-C19	PACKING 防油墊片	1
C5-20	OIL GAUGE 探油棒	1
C5-21	PACKING 橡膠墊圈	3
C5-22	CAP PLATE 下軸蓋	1
C5-23	PACKING 防油墊片	1
C5-25	"8"TYPE TRANSMISSION DEVICE 8字銅連桿	1
C5-26	ECCENTRIC WITH SCREW 小凸輪	1
C5-27	EYEPIECE H型連桿	1
C5-C28	STEEL BALL 萬向滾珠	1
C5-C29	LOOPER SLIDE BASE 連桿固定片	1
C5-C30	WASHER 波浪彈片	1
C5-C31	LOOPER FEEDING FORK 叉動柄	1
C5-32	---	1
C5-33	---	1
C5-702	SQUARE BALL 四方滑塊	1
C5-X9	SCREW 15/64x28 螺釘	2
C5-X28	SCREW 11/64x40 螺釘	1
C5-X28-1	SCREW 11/64x40 螺釘	1
C5-X31	SCREW 11/64x40 螺釘	16
C5-X32	SCREW 11/64x40 螺釘	2
C5-X34	SCREW 3/16x32 螺釘	1
C5-X35	SCREW 3/32x56 螺釘	2
C5-X36-1	SCREW M3.5 L=10 螺釘	4
C5-X37	SCREW 11/64x40 螺釘	1
C5-X38-1	SCREW 11/64x40 螺釘	2
C5-X42	SCREW 1/2x28 螺釘	3
C5-X50	SCREW 9/64x40 L=5 螺釘	4
C5-X56	SCREW 15/64x28 螺釘	2
C5-Y01	NUT 15/64x28 螺釘	1

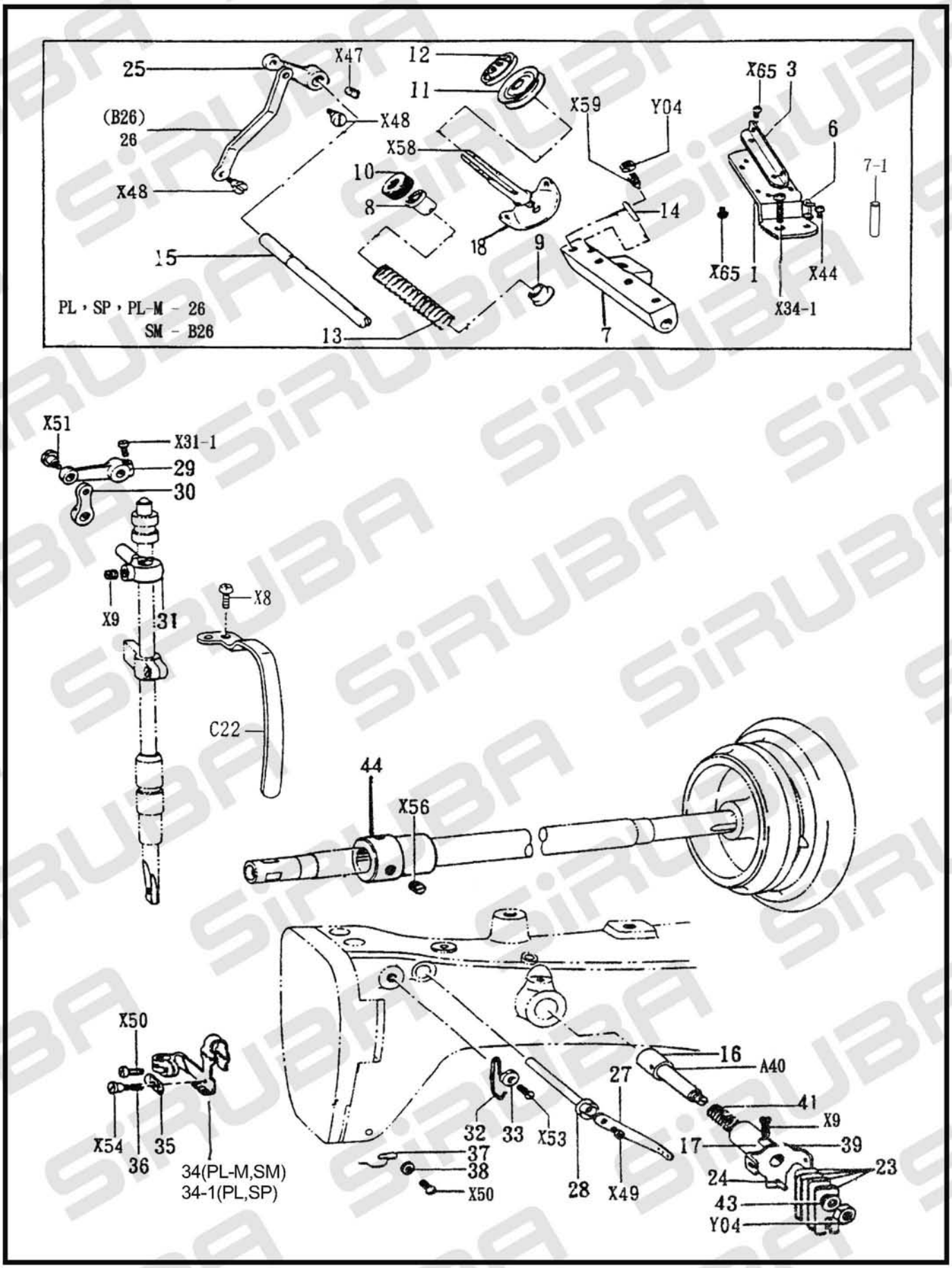
25
X47
12
11
X65
3
(B26)
26
X48
X59
Y04
6
X58
7-1
10
X48
8
14
18
9
15
X65
1
X44
PL，SP，PL-M - 26
SM - B26
13
7
X34-1
X51
X31-1
29
30
X9
31
X8
C22
44
X56
X50
16
A40
27
41
X9
X54
35
32
33
X53
17
39
36
37
38
34(PL-M,SM)
34-1(PL,SP)
X50
28
X49
24
23
43
Y04

UPPER THREADING MECHANISM

REF. NO.部件編號	NAME OF PARTS 說明	Amt req需求量
C6-01	UPPER THREAD GUIDE RETAINER 上導線座	1
C6-03	BRACKET 過線片	1
C6-06	THREAD HANGER 導線圈	1
C6-07	LINE GUIDE DEVICE 倒位基座	1
C6-7-1	PIN 銷	1
C6-08	TENSION SPRING WASHER 彈簧墊圈	3
C6-09	TENSION SPRING WASHER 彈簧墊圈	3
C6-10	NUT 螺母	3
C6-11	TENSION DISC 沙拉片	6
C6-12	TENSION DISE PRESSER 張力墊圈	3
C6-13	UPPER THREAD TENSION SPRONG 張力彈簧	3
C6-14	UPPER THREAD RELEASE PIN 銷	1
C6-15	THREAD RELEASER SHAFT 轉軸	1
C6-16	--	
C6-17	--	
C6-18	UPPER THREAD TENSION SUTD SCREW 過線固定片	3
C6-23	LOWER THREAD TENSION PLATE 張力夾線片	4
C6-24	PIN 銷	1
C6-25	TENSION RELEASE CRANK 連桿	1
C6-26	TENSION RELEASE CONNECTING BAR 上線鬆放提柄	1
C6-27	THREAD RELEASER LEVER 撥線片	1
C6-28	THREAD RELEASER LEVER SAFT 撥線軸	1
C6-29	TENSION RELEASE CONNECTING ROD 連桿	1
C6-30	TENSION RELEASE LINK 小連柄	1
C6-31	TENSION RELEASE SUTD 壓腳柱夾	1
C6-32	THREAD GUIDE 導線勾	1
C6-33	WASHER 墊圈	1
C6-34	UPPER THREAD TAKE-UP LEEVER ASSEMLY 天秤	1
C6-34-1	UPPER THREAD TAKE-UP LEEVER ASSEMLY 天秤	1
C6-35	THREAD CHECKER 天秤夾線片	1
C6-36	SPRING 彈簧	1
C6-37	LOWER THREAD GUIDE 導線勾(D)	1
C6-38	WASHER 墊圈	1
C6-39	UPPER THREAD TENSION REGULATOR ASSEMBLY ?通導線片	1
C6-A40	UPPER THREAD TENSION SUTD ASSEMBLY 張力調節軸	1
C6-41	UPPER THREAD TENSION SPRING 彈簧	1
C6-43	WASHER 墊圈	1
C6-44	UPPER THREAD FASTENING CAM WITH SCREW 上線張力凸輪	1
C6-X8	SCREW 9/64x40 螺釘	2
C6-X9	SCREW 15/64x28 螺釘	1
C6-X31-1	SCREW 9/64x40 螺釘	1
C6-X34-1	SCREW 11/64x40 螺釘	2
C6-X44	SCREW 9/64x40 L=5 螺釘	1
C6-X47	SCREW 11/64x40 螺釘	1
C6-X48	SCREW 9/64x40 螺釘	2
C6-X49	SCREW 9/64x40 L=6 螺釘	1
C6-X50	SCREW 9/64x40 螺釘	1
C6-X51	SCREW 11/64x40 螺釘	1
C6-X53	SCREW 9/64x40 螺釘	1
C6-X54	SCREW 3/32x56 螺釘	1
C6-X56	SCREW 15/64x28 螺釘	2
C6-X58	UPPER THREAD TENSION STUD SCREW 叉口合葉螺釘	3
C6-X59	SCREW 11/64x40 螺釘	1
C6-X65	SCREW 3/32x56 L=4 螺釘	2
C6-B26	TENSION RELEASE CONNECTING BAR 上線鬆放提柄	2
C6-C22	THREAD TAKE-UP COVER 天秤護蓋	1
C6-Y04	NUT 11/64x40 螺釘	1

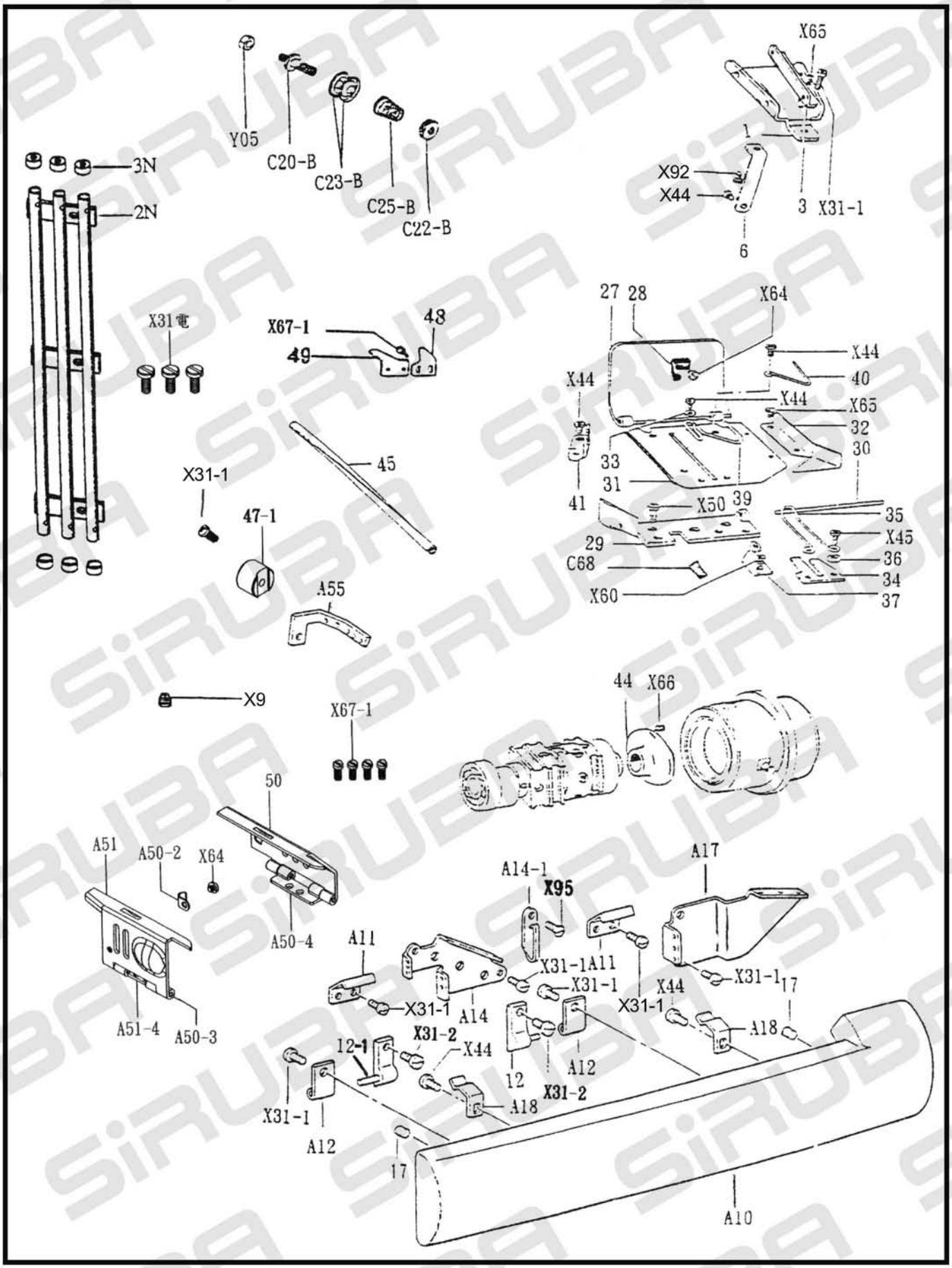
X65
Y05
C20-B
C23-B
C25-B
C22-B
1
X92
X44
3
X31-1
6
3N
2N
27
28
X64
X31電
X67-1
48
49
X44
40
X44
X65
32
30
X44
33
31
45
X31-1
41
X50
39
35
47-1
29
X45
C68
36
34
A55
X60
37
X9
44
X66
X67-1
50
A51
A50-2
X64
A14-1
X95
A17
A50-4
A11
X31-1
A11
X31-1
X31-1
X44
17
A51-4
A50-3
A14
X31-1
A18
X31-2
12-1
X44
12
A12
X31-2
X31-1
A18
A12
17
A10

LOWER THREADING MECHANISM

REF. NO.部件編號	NAME OF PARTS 說明	Amt req需求量
C7-01	LOERT THREAD GUIDE RETAINER 導線架(上)	1
C7-02N	THREE PIPE-LINE THREAD TUBE 三線過線管	1
C7-03	BRACKET 過線片	1
C7-03N	THREAD TUBE CLAMP 導線圈	6
C7-06	LOWER THREAD GUIDE SUPPORTER 支架輔助	1
C7-12	LOWER THREAD GUIDE HINGE ASSEMBLY 活動鈕(上)	2
C7-12-1	LOWER THREAD GUIDE HINGE ASSEMBLY 活動鈕插銷	2
C7-17	LOWER THREAD COVER 橡膠墊	2
C7-A10	LOWER THREAD COVER 下前蓋	1
C7-A11	PLATE SPRING 彈簧勾	2
E7-A12	FIXING PLATE 活動鈕(下)	2
C7-A14	LOWER THREAD TENSION BRACKET 三通過線片	1
C7-A14-1	THREAD GUIDE 穩線片	1
C7-A17	LOWER THREAD GUIDE RETAINER ?通過線片	1
C7-A18	PLATE SPRING 彈片勾	2
C7-A50	LOOPER SIDE COVER (R) ASSY 彎針護蓋	1
C7-A51	LOOPER SIDE COVER (L) ASSY 彎針護蓋	1
C7-A55	LOWER THREAD GUIDE 過線片	1
C7-C20-B	THREAD TENSION ROD 沙拉螺柱	3
C7-C21-B	LOWER TEREAD TENSION BRACKET 沙拉托架	3
C7-C22-B	LOWER TEREAD TENSION NUT 沙拉螺母	3
C7-C23-B	LOWER TEREAD TENSION PLATE 沙拉片	6
C7-C25-B	LOWER TEREAD TENSION SPRING 沙拉彈簧	3
C7-27	THREAD TAKE-UP LEVER COVER 護線蓋	1
C7-28	SPRING 彈簧勾	1
C7-29	LOWER THREAD TAKE-UP LEVER FRAME 過線輔助架	1
C7-30	LOWER THREAD TAKE-UP LEVER COVER SHAFT 銷	1
C7-31	LOWER THREAD TAKE-UP LEVER BASE 過線支架	1
C7-32	GUIDE PLATE 過線輔助架	1
C7-33	WASHER 墊圈	1
C7-34	LOERT THREAD GUIDE PLATE 固定片	1
C7-35	SCREW 彈簧	1
C7-36	WASHER 墊圈	1
C7-37	LOWER THREAD GUIDE(LEFT) 彈片扣	1
C7-39	LOWER THREAD GUIDE(LEFTRIGHT) 導線勾	2
C7-40	LOWER THREAD GUIDE(LEFT) 導線勾	1
C7-41	LOWER THREAD GUIDE PLATE 固定片	1
C7-44	LOWER THREAD TAKE-UP DISC ASSEMBLY 配線凸輪	1
C7-45	LOWER THREAD FEED TUBE 過線管	1
C7-47-1	LOOPER THREAD GUIDE BRACKET 針受座	1
C7-48	THREAD CUTTER GUIDE PLATE 切線刀	1
C7-49	THREAD CUTTER 切線刀	1
C7-A50-2	STOPPER SPRING PLATE 彈片勾	2
C7-A50-3	PIN 銷	4
C7-A50-4	FACE PLATE UPPER HINGE ASSEMBLY(R) 蝴蝶後扭(右)	1
C7-A51-4	FACE PLATE UPPER HINGE ASSEMBLY(L) 蝴蝶後扭(左)	1
C7-C68	PIN 銷	1
C7-X9	SCREW 15/64x28 螺釘	1
C7-X31電	SCREW 11/64x40 螺釘	3
C7-X31-1	SCREW 11/64x40 螺釘	12
C7-X31-2	SCREW 9/64x40 L10 螺釘	2
C7-X44	SCREW 9/64x40 L5 螺釘	7
C7-X45	SCREW 9/64 螺釘	2
C7-X50	SCREW 9/64 螺釘	2
C7-X60	SCREW 9/64x40 L4 螺釘	1
C7-X64	SCREW 3/32x56 螺釘	3
C7-X65	SCREW 3/32x56 L4 螺釘	2
C7-X66	SCREW 1/4x40 螺釘	2
C7-X67-1	SCREW 3/32x56 螺釘	6
C7-X92	SCREW 9/64x40 螺釘	1
C7-X95	SCREW 9/64x40 螺釘	1
C7-Y05	NUT 9/64x40 螺母	2

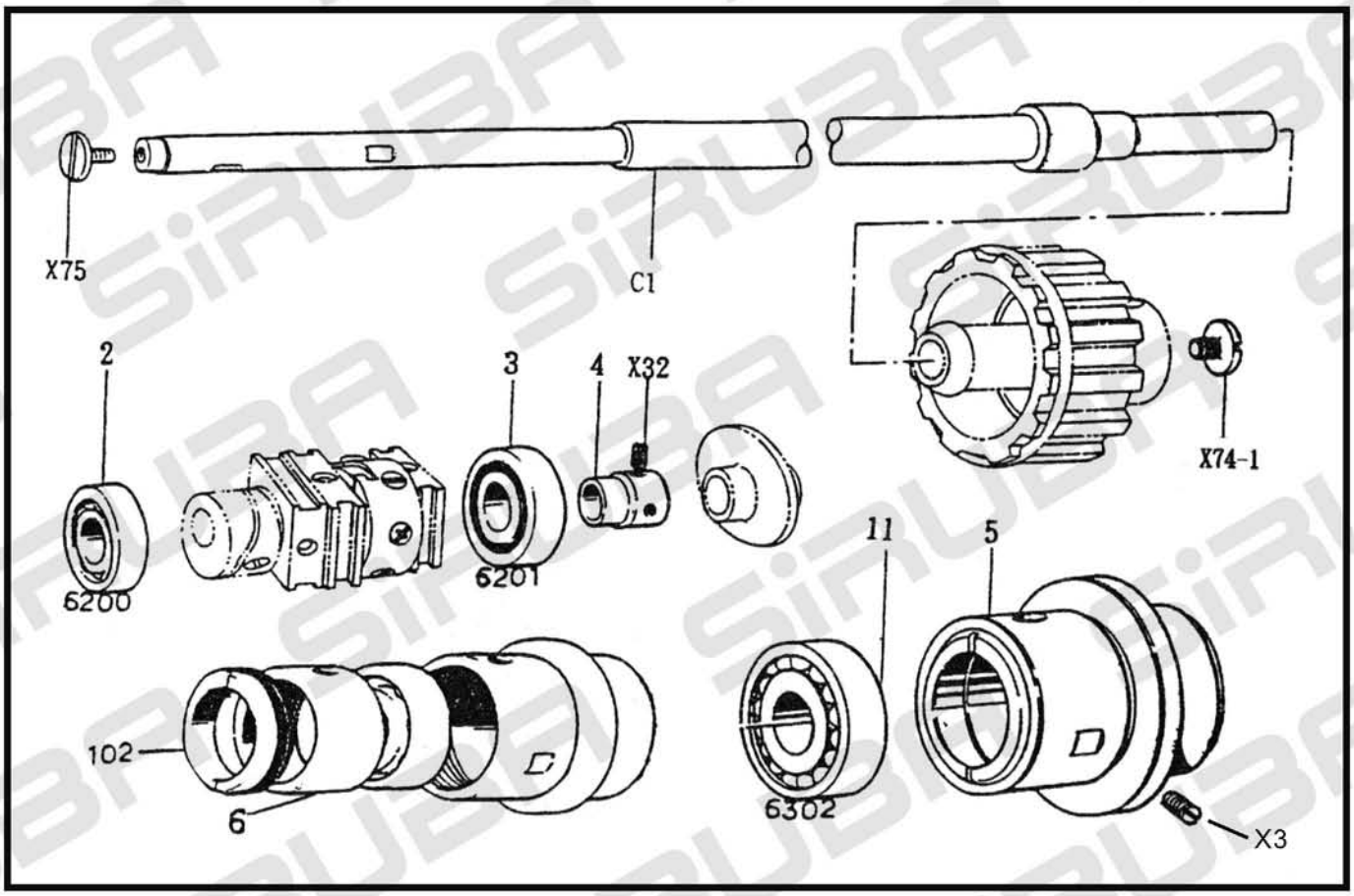
X75
C1
2
3
4
X32
X74-1
6200
6201
11
5
102
6
6302
X3

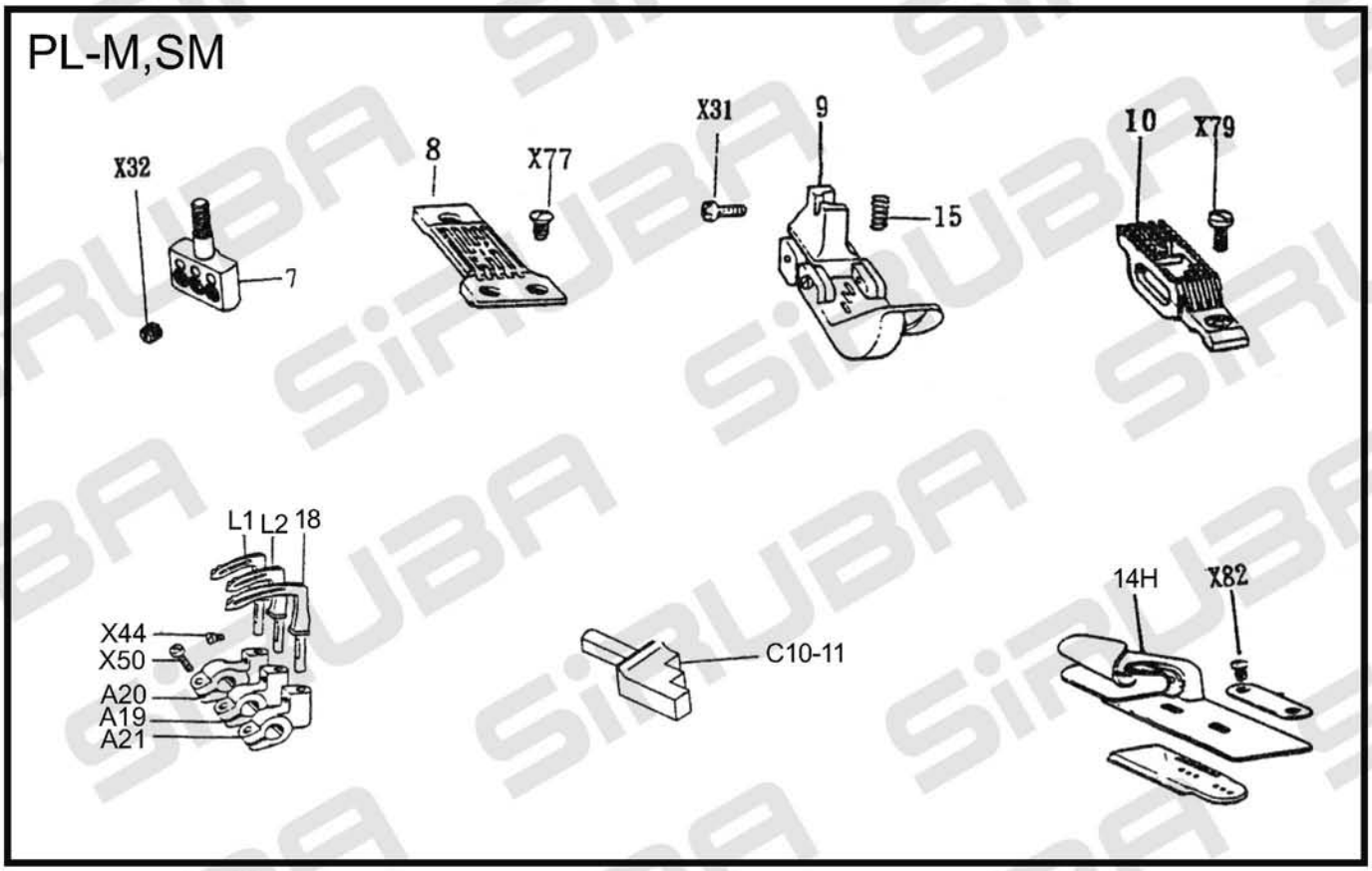
PL-M,SM
X32
7
8
X77
X31
9
15
10
X79
L1
L2
18
X44
X50
A20
A19
A21
C10-11
14H
X82

LOWER SHAFT MECHANISM-GAUGE PARTS

REF. NO.部件編號	NAME OF PARTS 說明	Amt req需求量
C8-C1	LOVER SHAFT 下主軸	1
C8-02	BEARING 6200 Z 軸承	1
C8-03	BEARING 6201 Z 軸承	1
C8-04	BALL BEARING BUSHING 內套筒	1
C8-05	BEARING CASE ASSEMBLY 軸套筒(下)	1
C8-06	BEARING FIXING BUSHING 緊壓套筒	1
C8-07	NEEDLE CLAMP WITH SCREW 針夾	1
C8-08	NEEDLE PLATE 針板	1
C8-09	PRESSER FOOT ASSEMBLY 壓腳組	1
C8-10	FEED DOG 送布齒	1
C8-C10-11	NEEDLE GUARD 針受	1
C8-11	BEARING 6302 軸承	1
C8-14H	LAPPER ASSEMBLY 導布架喇叭	1
C8-15	SPRING 彈簧	1
C8-18	LOOPER LONG 彎針(長)	1
C8-A19	LOOPER HOLDER (SHORT) 彎針台(短)	1
C8-A20	LOOPER HOLDER (MIDDLE) 彎針台(中)	1
C8-A21	LOOPER HOLDER (LONG) 彎針台(長)	1
C8-102	BEARING FIXING SCREW 外牙螺母	1
C8-L1	LOOPER SHORT 彎針(短)	1
C8-L2	LOOPER MEDIUM 彎針(中)	1
C8-X3	SCREW 5/16×28 螺釘	1
C8-X31	SCREW 9/64×40 螺釘	1
C8-X32	SCREW 11/64×40 螺釘	3
C8-X44	SCREW 9/64×40 螺釘	3
C8-X50	SCREW 9/64×40 L10 螺釘	3
C8-X74-1	SCREW1/4×28 螺釘	1
C8-X75	SCREW 11/64×40 螺釘	1
C8-X77	SCREW 11/64×40 螺釘	3
C8-X79	SCREW 3/16×32 螺釘	1
C8-X81	SCREW 9/64×40 螺釘	1
C8-X82	SCREW 9/64×40 螺釘	2

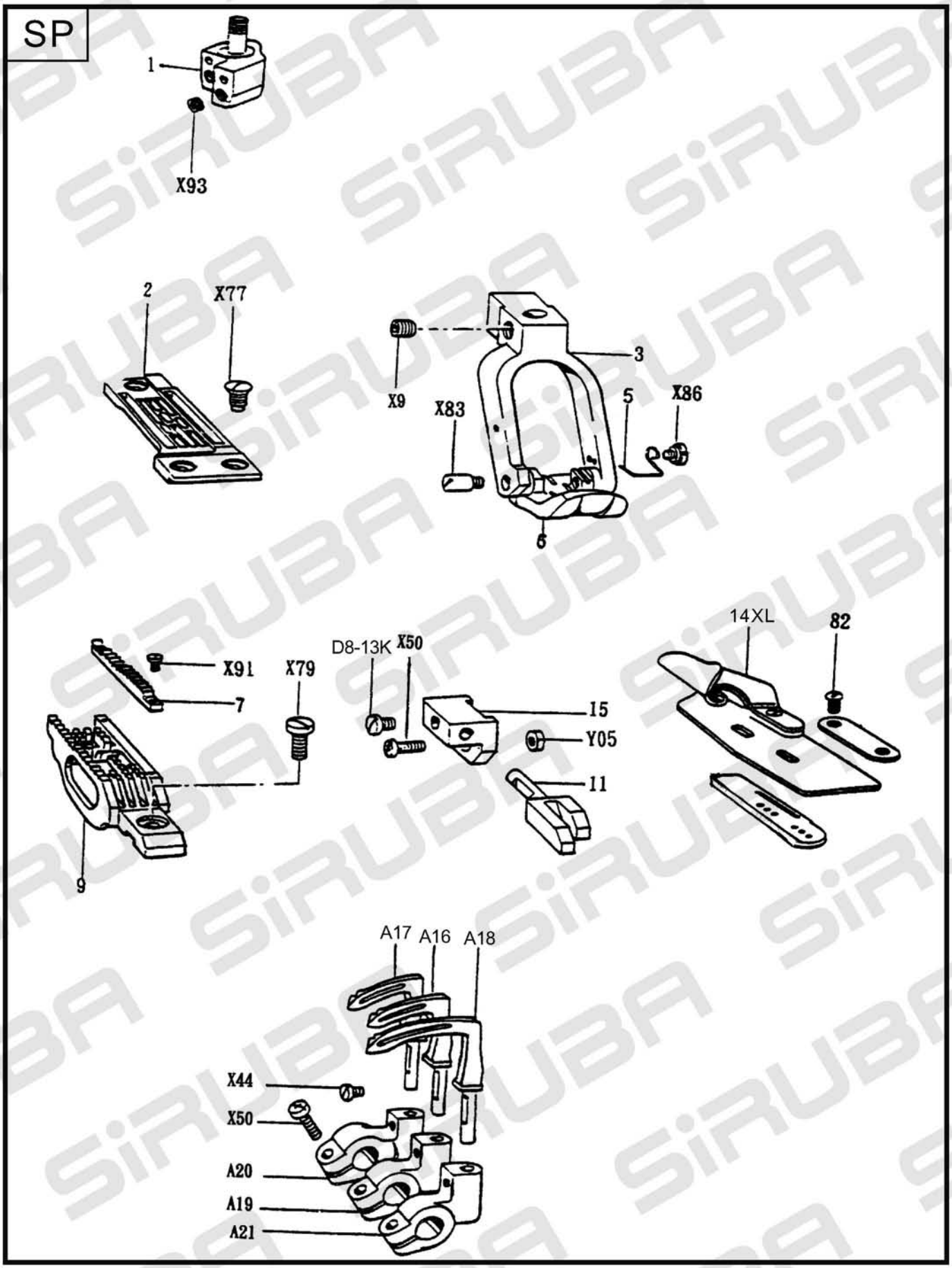
SP
1
X93
2
X77
X9
3
X83
5
X86
6
X91
7
X79
9
D8-13K
X50
15
Y05
11
14XL
82
A17
A16
A18
X44
X50
A20
A19
A21

GAUGE PARTS(SP) SP

REF. NO.部件編號	NAME OF PARTS 說明	Amt req需求量
C9-01	NEEDLE CLAMP ASSEMBLY 針夾	1
C9-02	NEEDLE PLATE 針板	1
C9-03	PRESSER FOOT ASSEMBLY 壓腳頭	1
C9-05	PRESSER FOOT (F) SPRING 彈簧	1
C9-06	PRESSER FOOT ASSEMBLY 壓腳底	1
C9-07	SUB FEED DOG 導布齒	1
C9-09	FEED DOG 送布齒	1
C9-11	NEEDLE GUARD 針受	1
C9-14XL	LAPPER ASSEMBLY 導布架喇叭	1
C9-15	NEEDLE GUARD BRACKET 針受連結	1
C9-A16	LOOPER (SHORT) 彎針(短)	1
C9-A17	LOOPER (MIDDLE) 彎針(中)	1
C9-A18	LOOPER (LONG) 彎針(長)	1
C9-A19	LOOPER HOLDER (SHORT) 彎針台(短)	1
C9-A20	LOOPER HOLDER (MIDDLE) 彎針台(中)	1
C9-A21	LOOPER HOLDER (LONG) 彎針台(長)	1
C9-X9	SCREW 15/64×28 螺釘	1
C9-X44	SCREW 9/64×40 螺釘	1
C9-X50	SCREW 9/64×40 螺釘	4
C9-X77	SCREW 11/64×40 螺釘	3
C9-X79	SCREW 3/16×32 螺釘	1
C9-X82	SCREW 9/64×40 螺釘	1
C9-X83	STUD SCREW 螺釘銷	2
C9-X86	SCREW 3/32×56 合葉螺釘	1
C9-X91	SCREW 5/64×60 螺釘	2
C9-X93	SCREW1/8×44 螺釘	3
C9-Y05	NUT 9/64×40 螺釘	1
C9-D8-13K	SCREW 9/64×40 螺釘	1

PL

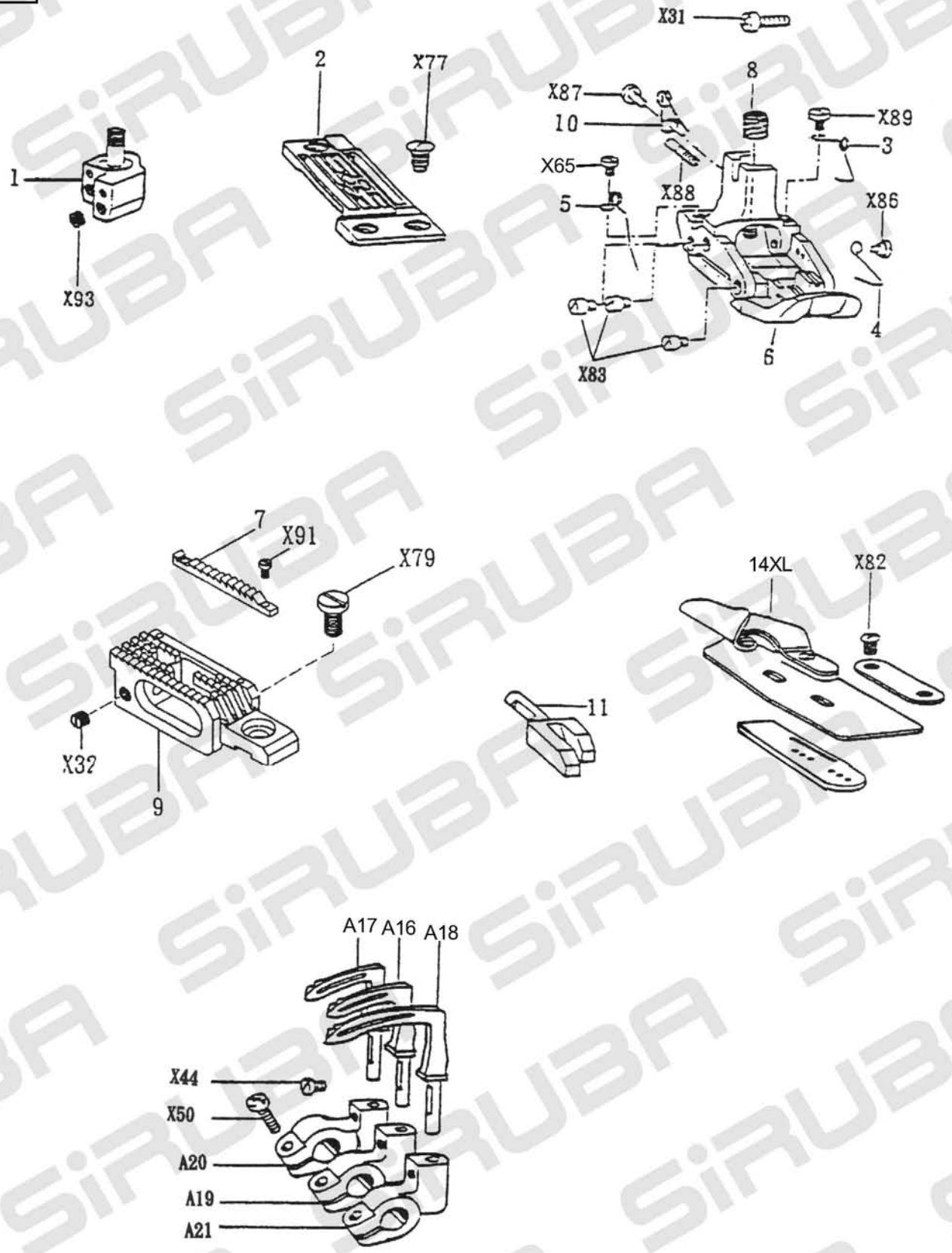
X31
2
X77
8
X87
10
X89
3
X65
X88
5
X86
1
X93
4
6
X83
7
X91
X79
14XL
X82
11
X32
9
A17
A16
A18
X44
X50
A20
A19
A21

GAUGE PARTS (DP) DP

REF. NO.部件編號	NAME OF PARTS 說明	Amt req需求量
C10-01	NEEDLE CLAMP ASSEMBLY 針夾	1
C10-02	NEEDLE PLATE 針板	1
C10-03	SPRING M 彈簧	1
C10-04	SPRING F 彈簧	1
C10-05	SPRING BL 彈簧	1
C10-06	PRESSER FOOT ASSEMBLY 前壓腳底	1
C10-07	SUB FEED DOG 導布齒	1
C10-08H	NUT 1/8×44 螺母	1
C10-09	FEED DOG 送布齒	1
C10-10	SPRING BS 彈簧	1
C10-11	NEEDLE GUARD 針受	1
C10-14XL	LAPPER ASSEMBLY 導布架喇叭	1
C10-A16	LOOPER (SHORT) 彎針(短)	1
C10-A17	LOOPER (MIDDLE) 彎針(中)	1
C10-A18	LOOPER (LONG) 彎針(長)	1
C10-A19	LOOPER HOLDER (SHORT) 彎針台(短)	1
C10-A20	LOOPER HOLDER (MIDDLE) 彎針台(中)	1
C10-A21	LOOPER HOLDER (LONG) 彎針台(長)	1
C10-X31	SCREW 9/64×40 螺釘	1
C10-X32	SCREW 11/64×40 螺釘	1
C10-X44	SCREW 9/64×40 螺釘	3
C10-X50	SCREW 9/64×40 螺釘	3
C10-X65	SCREW 3/32×56 螺釘	1
C10-X77	SCREW 11/64×40 螺釘	3
C10-X79	SCREW 3/16×32 螺釘	1
C10-X82	SCREW 9/64×40 螺釘	1
C10-X83	STUD SCREW 螺釘銷	3
C10-X86	SCREW 3/32×56 螺釘	1
C10-X87	SCREW 1/8×44 L5 螺釘	1
C10-X88	SCREW 1/8×44 螺釘	1
C10-X89	SCREW 3/32×56 螺釘	1
C10-X91	SCREW 5/64×56 螺釘	2
C10-X93	SCREW 1/8×44 螺釘	3

PL,PL-M

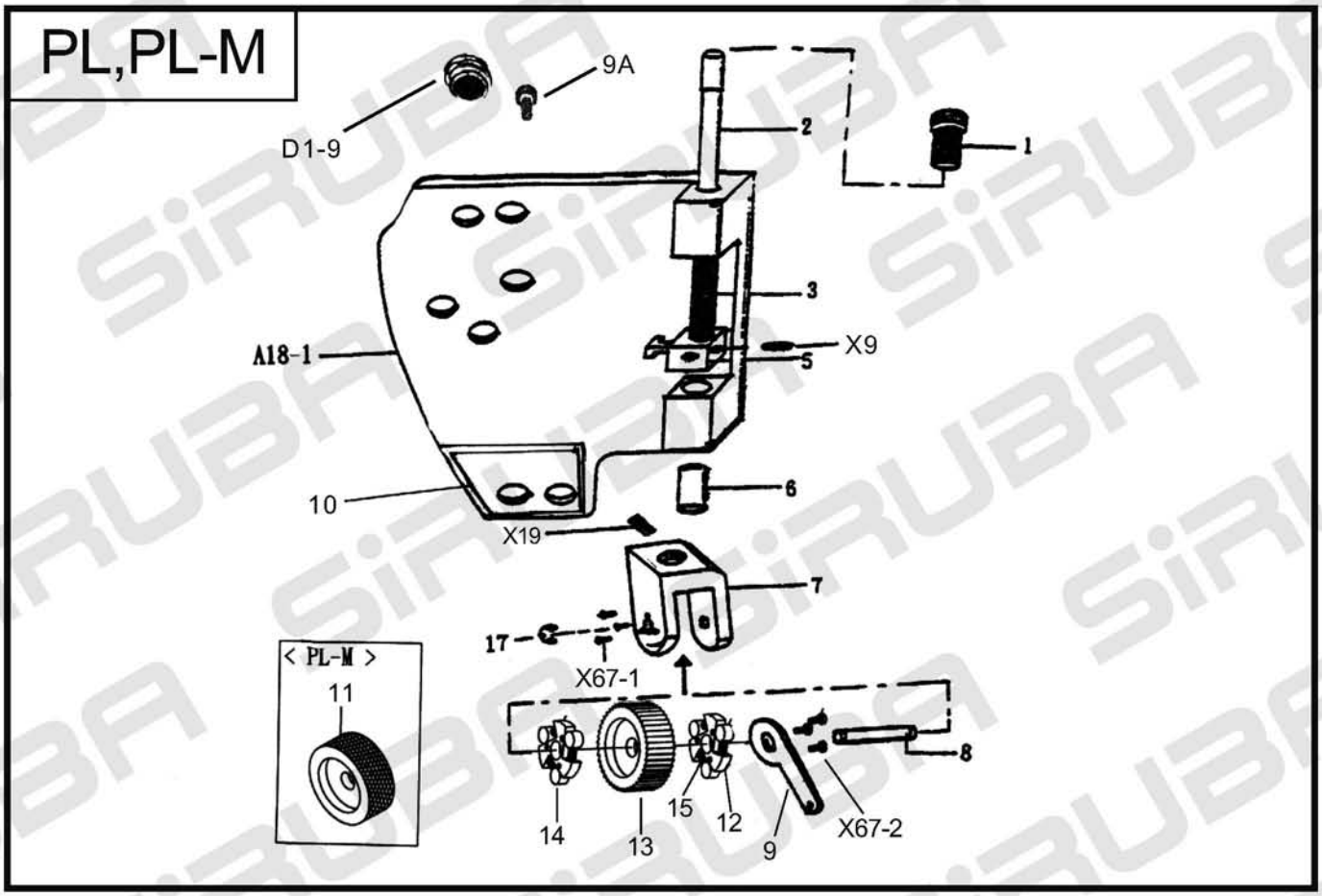
9A
D1-9
2
1
3
A18-1
X9
5
10
6
X19
7
17
X67-1
< PL-M >
11
8
14
13
15
12
9
X67-2

SP

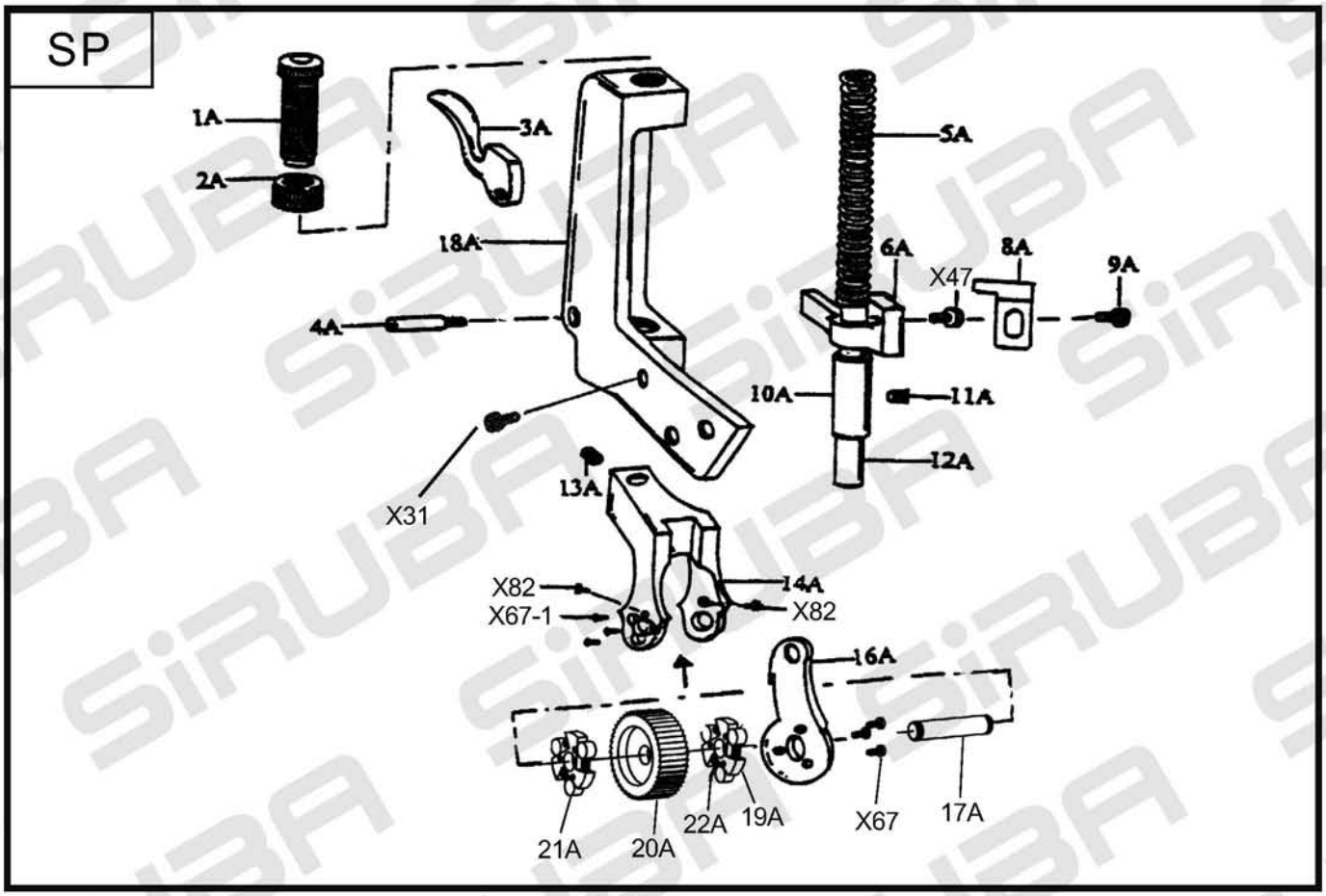
1A
2A
3A
5A
18A
6A
8A
X47
9A
4A
10A
11A
12A
X31
13A
X82
14A
X67-1
X82
16A
21A
20A
22A
19A
X67
17A

PULLER DEVICE MECHANISM DP、SP

REF. NO.部件編號	NAME OF PARTS 說明	Amt req需求量
C11-01	PRESSURE ADJUSTING SCREW 外牙螺母	1
C11-02	UPPER WHEEL PRESSER BAR 立軸	1
C11-03	SPRING 張力彈簧	1
C11-05	WHEEL DIRECTION FIXING DEVICE 拉布輪壓力提柄	1
C11-06	FRESSER ROD BUSHING 軸套	1
C11-07	UPPER WHEEL SEAT 拉布輪架	1
C11-08	UPPER WHEEL CONNECTON 固定軸	1
C11-09	ONE WAY PULL HOLDER 拉柄	1
C11-10	PACKING 防油墊片	1
C11-11	LOWER WHEEL 拉布輪	1
C11-12	ONE WAY TRIANGULAR WHEEL 單向三角軸片	2
C11-13	UPPER WHEEL 拉布輪	1
C11-14	ONE WAY STILL BALL 單向滾珠	6
C11-15	ONE WAY STILL SPRING 單向彈簧	6
C11-17	CHOCK RING E型扣環	1
C11-A18-1	FACE PLATE (UPPER) DP上前蓋座	1
C11-D1-9	RUBBER PLUG 橡膠塞	4
C11-X09	SCREW 15/64×28 螺釘	1
C11-X19	SCREW 螺釘	2
C11-X31	SCREW 9/64×40 螺釘	1
C11-X47	PRESSER FOOT LIFTER 螺釘	1
C11-X47	SCREW 螺釘	1
C11-X67	SCREW 3/32×56 螺釘	3
C11-X67-1	SCREW 3/32×56 螺釘	6
C11-X67-2	SCREW 3/32×56 螺釘	3
C11-X82	SCREW 9/64×40 螺釘	3
C11-01A	PRESSURE ADJUSTING SCREEW 外牙螺母	2
C11-02A	NUT 螺母	1
C11-03A	PRESSER FOOT LIFTER 手提柄	1
C11-04A	STUD SCREW 固定銷	1
C11-05A	SPRING 張力彈簧	1
C11-06A	PRESSER BAR GUIDE ASSEMBLY 拉布輪壓力提柄	1
C11-08A	ROLLER PRESSER BAR LIFTER 舌片	1
C11-09A	SCREW PRESSER ROD BUSHING 螺釘	5
C11-10A	PRESSER ROD BUSHING 軸套	1
C11-12A	UPPER WHEEL PRESSER BAR 立軸	1
C11-14A	PULLER SUPPORTER ASSEMBLY 拉布輪架	1
C11-16A	ONE WAY PULL HOLDER 拉柄	1
C11-17A	UPPER WHEEL CONNECTON 固定軸	1
C11-18A	FACE PLATE 拉布輪基座	1
C11-19A	ONE WAY TRIANGULAR WHEEL 單向三角軸片	2
C11-20A	UPPER WHEEL 拉布輪	1
C11-21A	ONE WAY STILL BALL 單向滾珠	6
C11-22A	ONE WAY STILL SPRING 單向彈簧	6

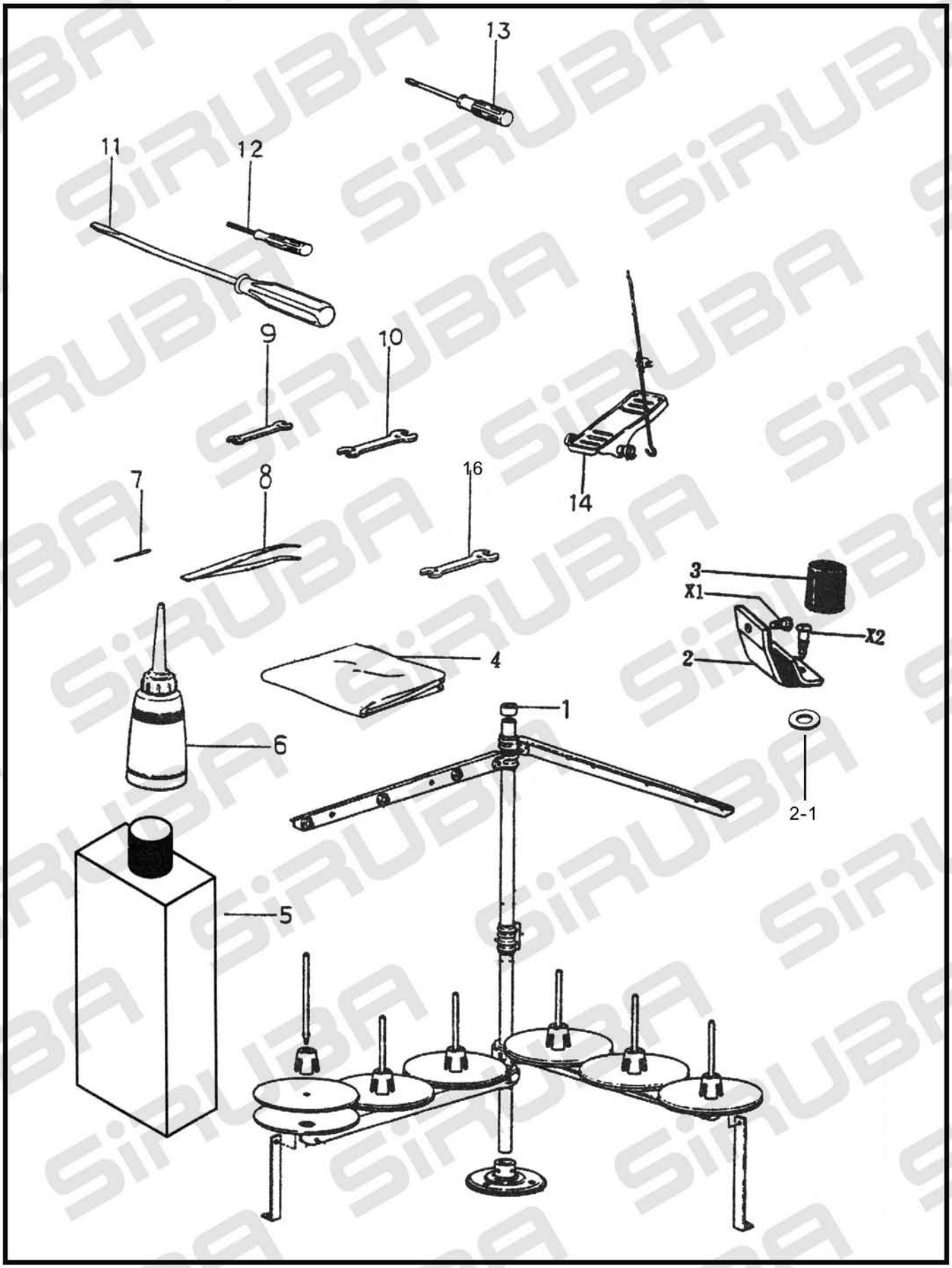
13
11
12
9
10
14
7
8
16
3
X1
X2
2
4
1
6
2-1
5

ACCESSORIES

REF. NO.部件編號	NAME OF PARTS 說明	Amt req需求量
C12-01	THREAD STAND 六葉線架	1
C12-02	CUSHION ASSEMBLY 固定座	2
C12-2-1	WASHER 墊圈	2
C12-03	BASE CUSHION 橡膠墊塊	2
C12-04	HEAD COVER 防塵套	1
C12-05	OIL TANK 大油壺	1
C12-06	OILER ASSEMBLY 小油瓶	1
C12-07	NEEDLE 針	5
C12-08	TWEEZERS 線夾	1
C12-09	SPANNER 固定板手(#7)	1
C12-10	SPANNER 固定板手(#8)	1
C12-11	SCREW DRIVER 大起子	1
C12-12	SCREW DRIVER 小起子	1
C12-13	SCREW DRIVER 中起子	1
C12-14	THREADLE 腳踏板	2
C12-16	SPANNER 固定板手(#10)	1
C12-X1	SCREW1/4×28 螺釘	2
C12-X2	SCREW 6.2×26 木螺釘	2