SiRUBA GAGE PARTS LIST	Series	Remark	Page	Date
	DL918	NM1/NH1	1 / 1	2012/11/01

DL918-NM1/NH1規格件表/CONVERSION CHART

MODEL	SUB-CLASS	OPERATING PANEL	NEEDLE PLATE	FEED DOG	PRESSER FOOT	HOOK ASM	BOBBIN CASE ASM	BOBBIN	NEEDLE	HAND WHEEL	MOTOR
機 型	規 格	操作盒	針 板	送 具	押 具	梭 頭	梭 殼	梭 子	針 號	手輪	馬達
DL918-NM1-10 ~ DL918-NM1-13	中厚布	LU277-A	E706	D704	P708	G121	G202	G303	DBX1#14	LH500-E	T50D8S11
DL918-NH1-10 ~ DL918-NH1-13	厚布		E707	D714	P714	G124	G202	G303	DBX1#22		

SiRUBA MODEL COMPARE LIST	Series	Remark	Page	Date
	L918/L918U/DL918/DL7000	NM1/NH1	1 / 3	2012/01/01

L918/L918U/DL918/DL7000 型別件表

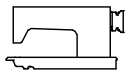										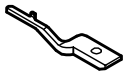
MODEL	SUB-CLASS	SPRING	SPRING	ECCENTRIC	THREAD GUIDE	NEEDLE BAR	FIXED PIN	ADJUSTING KNOB	REGULATOR	HOOK FIXER
機　型	規　格	控線彈簧	控線彈簧	偏心凸輪	擋環片	針棒	固定銷	調整旋鈕	調整銷	旋梭定位板
NM1	薄布料 ～ 中厚料	LA31	LA22	LN38	A LA17 B SK613	LN37	LC13	LC23G	LH11	LE14D
NH1	中厚料 ～ 厚布料	LA131	LA122	LN63	A LA150 B SK689	LN62	LC613	LC623G	LH111	LE614D

SiRUBA MODEL COMPARE LIST	Series	Remark	Page	Date
	L918/L918U/DL918/DL7000	NM1/NH1	2/3	2013/01/01

L918/L918U/DL918/DL7000 型別件表

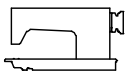						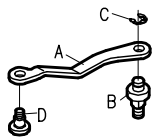	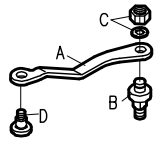	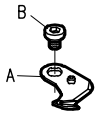	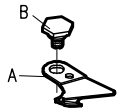
MODEL	SUB-CLASS	SOLENOID BRACKET	PRESSER PLATE	FIXED PLATE	FIXED PLATE	CONNECTING ROD	CONNECTING ROD	MOVABLE KNIFE	MOVABLE KNIFE
機　型	規　格	電磁閥座	押板	固定刀	固定片	連桿	連桿	活動刀	活動刀
NM1	薄布料 ～ 中厚料	LU26	LU04	LU05	LU28	A LU15 B SK662 C EM050 D SK664	—	A LU02 B SK660	—
NH1	中厚料 ～ 厚布料	LU626	LU604	LU605	LU628	—	A LU615 B SK677 C NK26/WM402 D SK682	—	A LU602 B SK683

SiRUBA MODEL COMPARE LIST	Series	Remark	Page	Date
	L918/L918U/DL918/DL7000	NM1/NH1	3 / 3	2013/01/01

L918/L918U/DL918/DL7000 型別件表

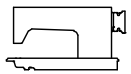					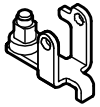	
MODEL	SUB-CLASS	MOVABLE KNIFE CONNECTING ROD	MOVABLE KNIFE CONNECTING ROD	PRESSER PLATE	MOVABLE KINFE	TRIMMER SOLENOID
機　型	規　格	活動刀連桿	活動刀連桿	刀座	轉子連桿	切線電磁閥
NM1	薄布料 ～ 中厚料	LU01	—	LU03	LU18	LU25
NH1	中厚料 ～ 厚布料	—	LU601	LU603	LU618	LU625

SiRUBA PARTS LIST	Series	Parts Group	Subclass / Remark	Page
	DL918-NM1/NH1	LA	#:Use for NH1	1/2
				Date
				2012/11/29

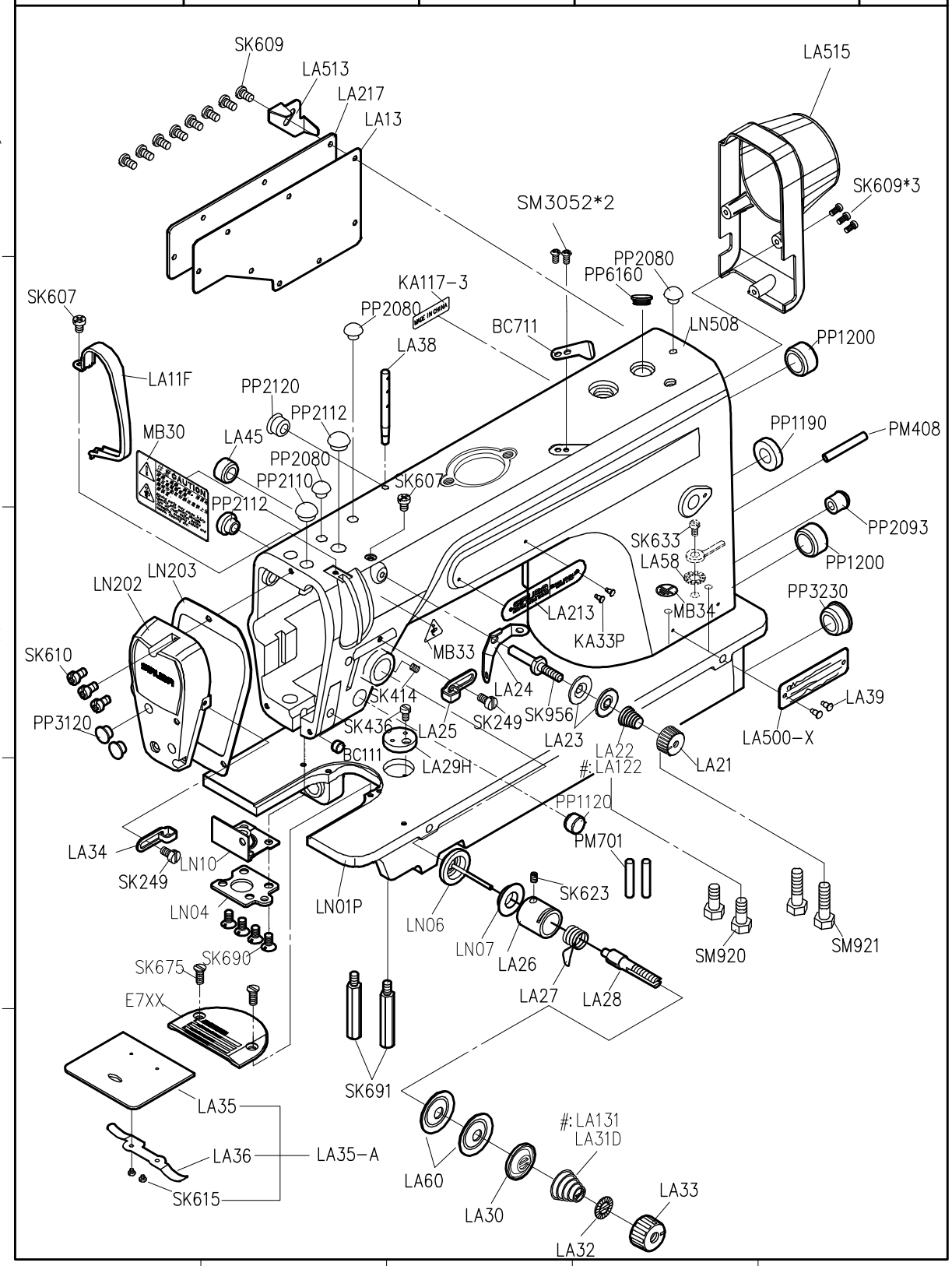

SiRUBA PARTS LIST	Series	Parts Group	Subclass / Remark	Page
	DL918-NM1/NH1	LA		2/2
				Date
				2012/09/12

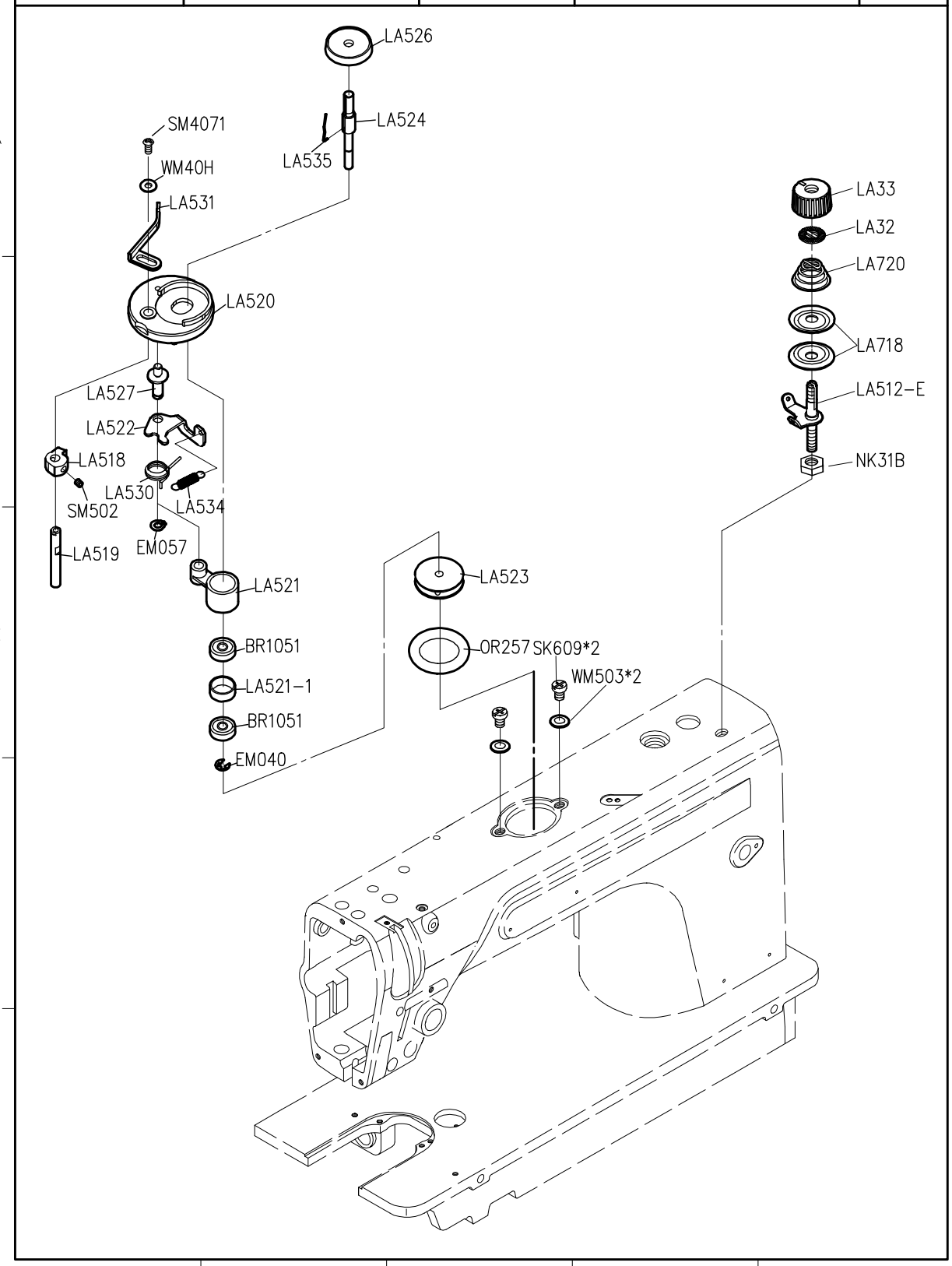

SIRUBA PARTS LIST	Series	Parts Group	Subclass / Remark	Page
	DL918-NM1/NH1	LB		1/1
				Date
				2012/09/12

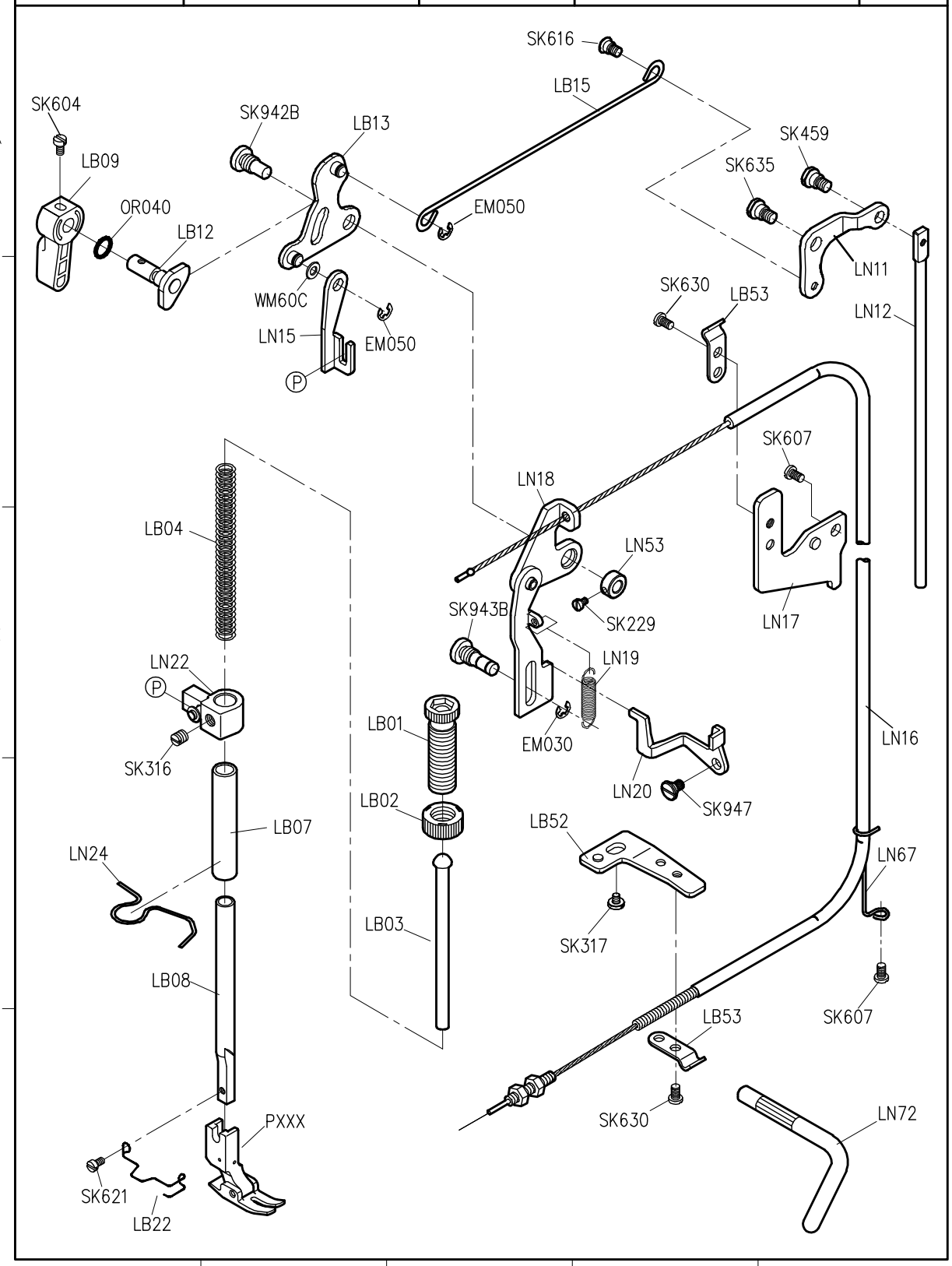

SiRUBA PARTS LIST	Series	Parts Group	Subclass / Remark	Page
	DL918-NM1/NH1	LC	#:Use for NH1	1/1
				Date
				2012/09/12

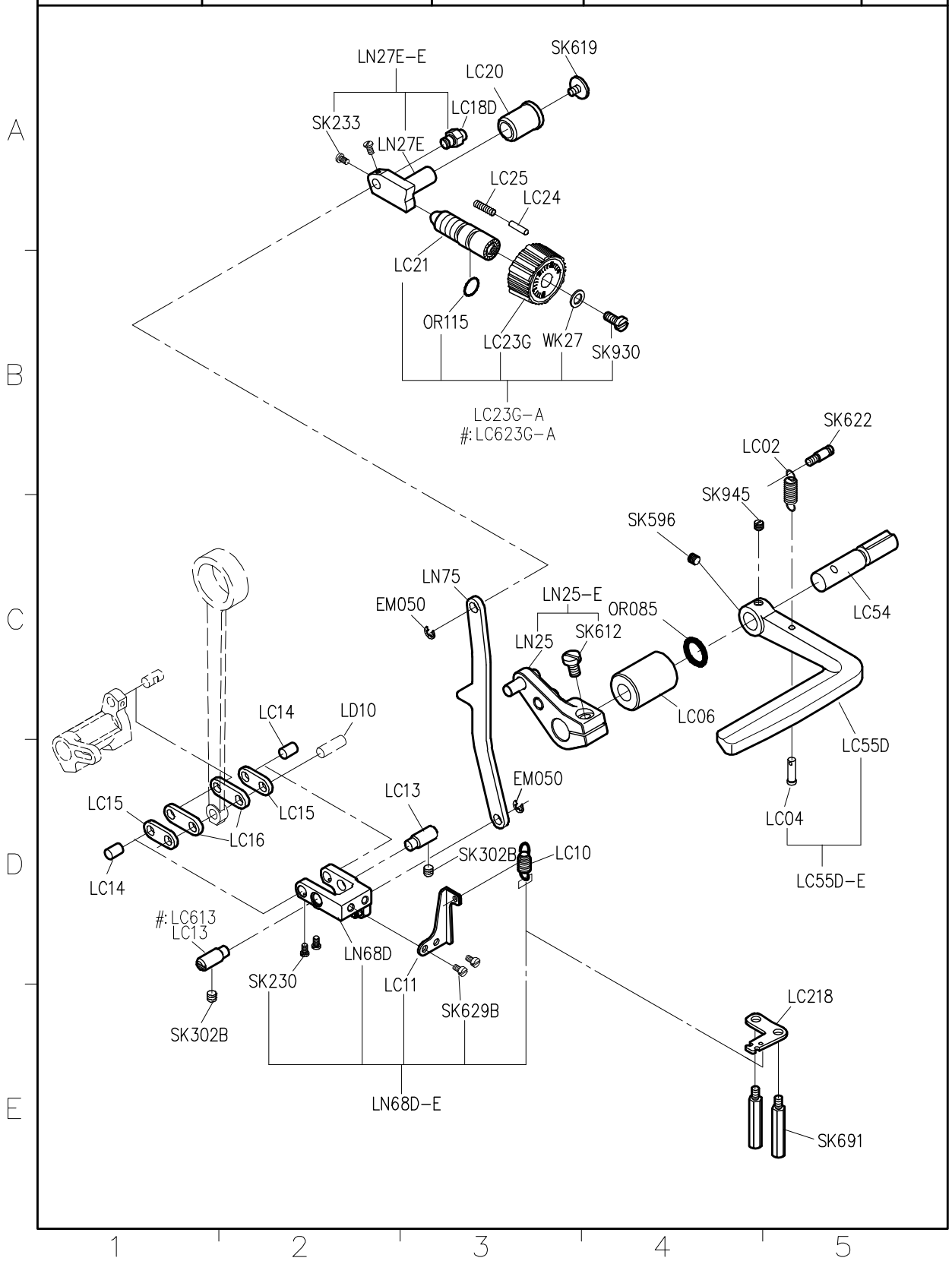

SiRUBA PARTS LIST	Series	Parts Group	Subclass / Remark	Page
	DL918-NM1/NH1	LD		1/1
				Date
				2012/09/12

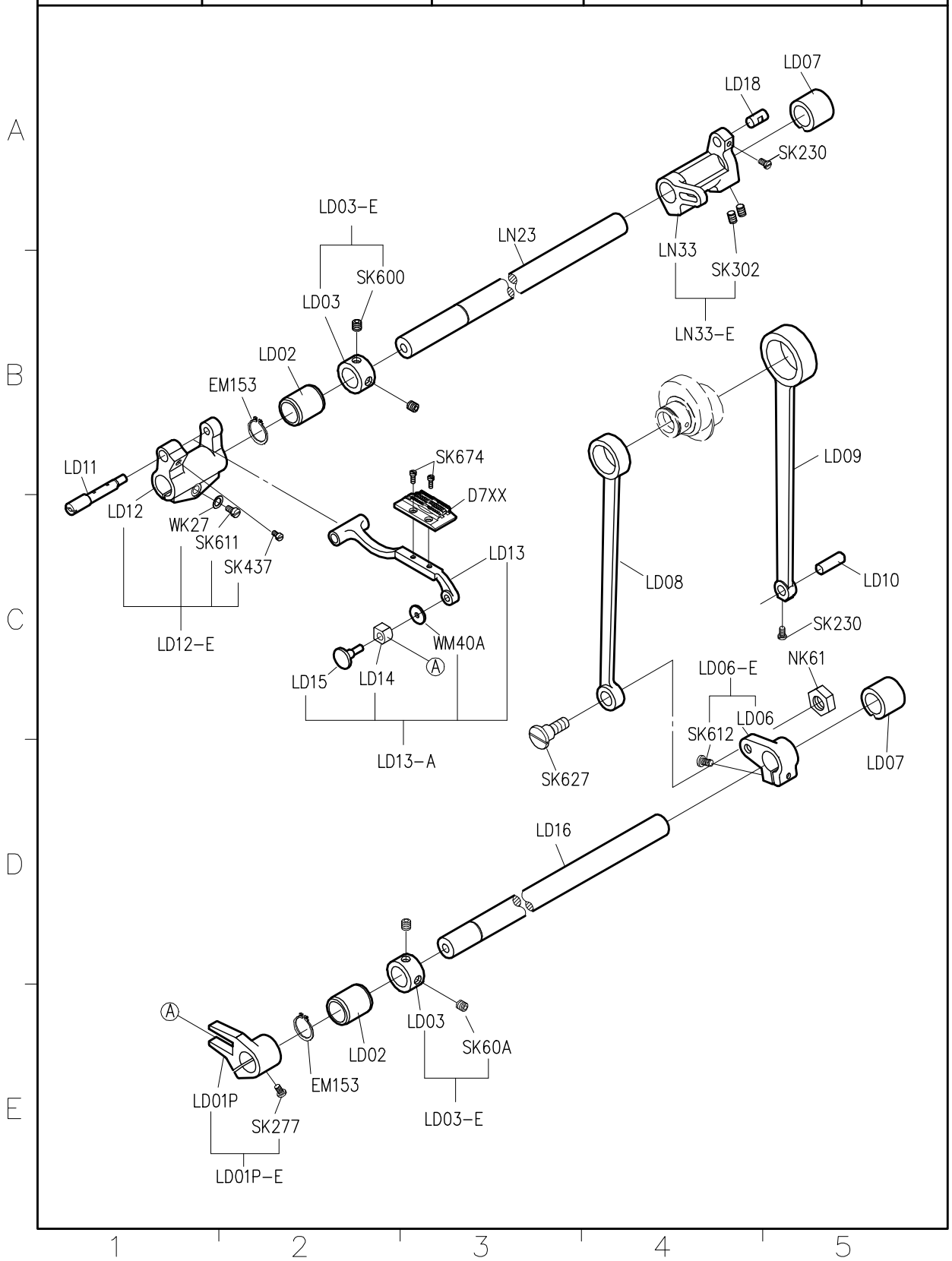

SiRUBA PARTS LIST	Series	Parts Group	Subclass / Remark	Page
	DL918-NM1/NH1	LE	#:Use for NH1	1/1
				Date
				2012/11/30

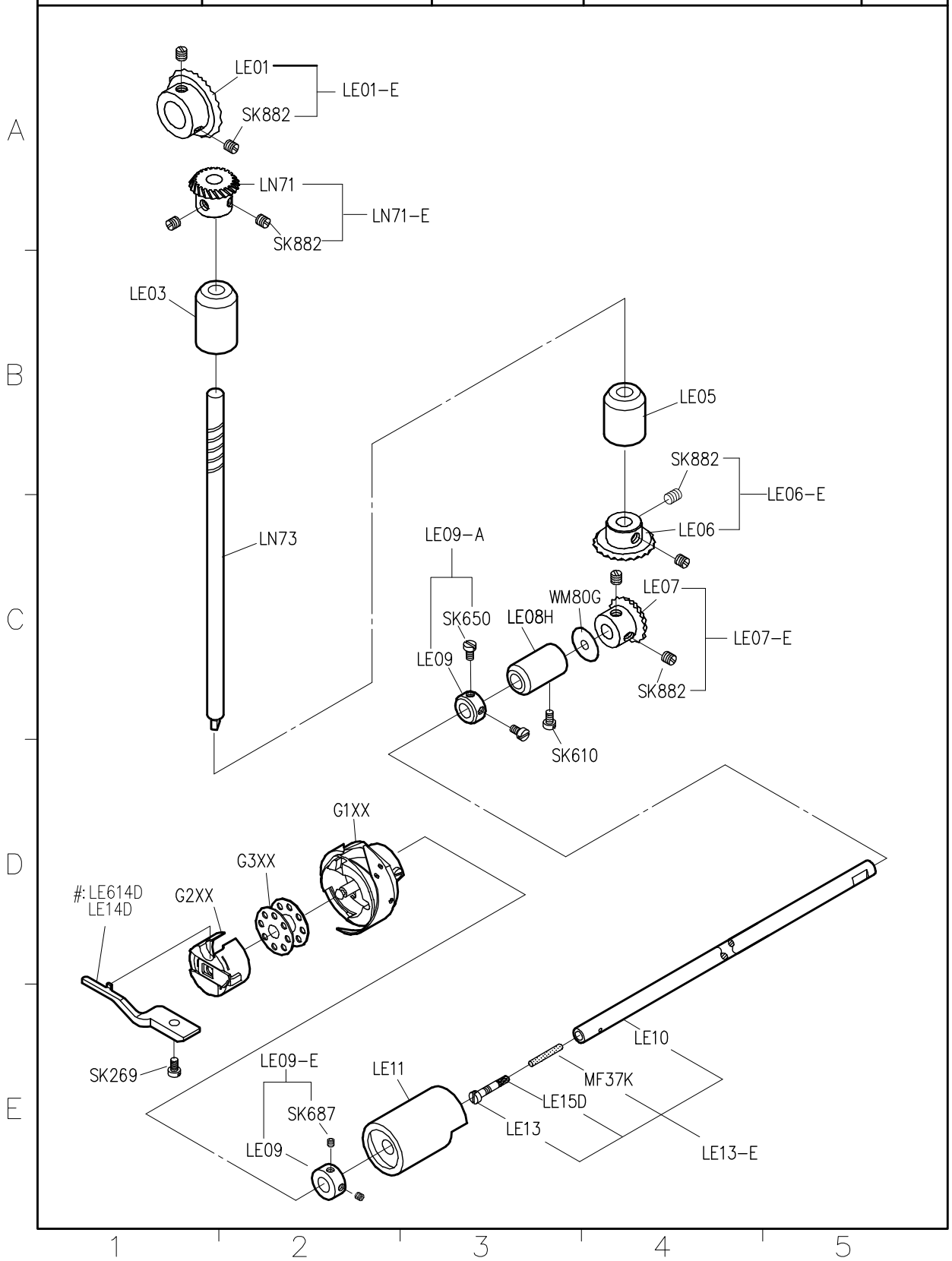

SiRUBA PARTS LIST	Series	Parts Group	Subclass / Remark	Page
	DL918-NM1/NH1	LG	#:Use for NH1	1/1
				Date
				2012/09/12

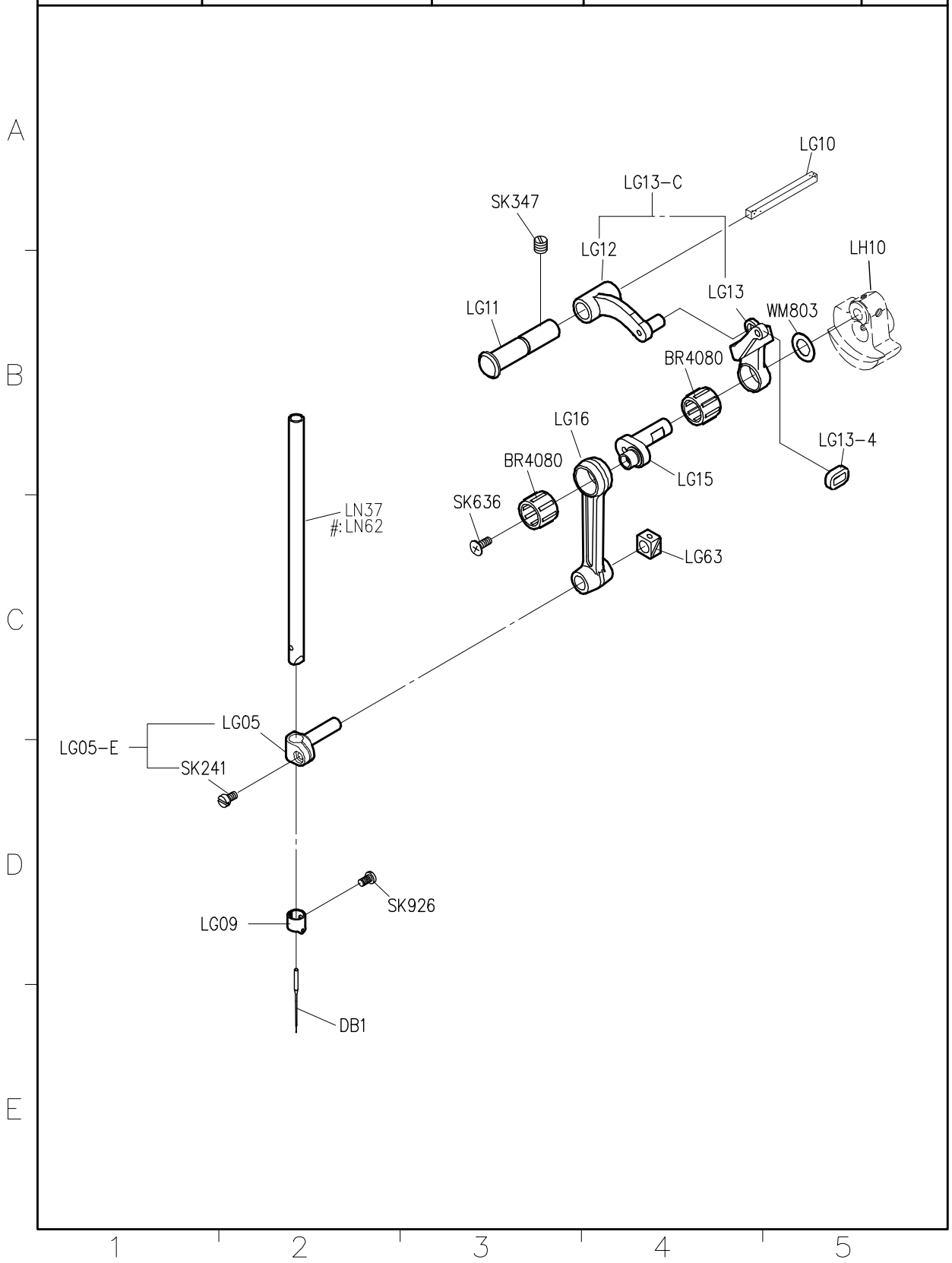

SiRUBA PARTS LIST	Series	Parts Group	Subclass / Remark	Page
	DL918-NM1/NH1	LH	#:Use for NH1	1/1
				Date
				2012/09/12

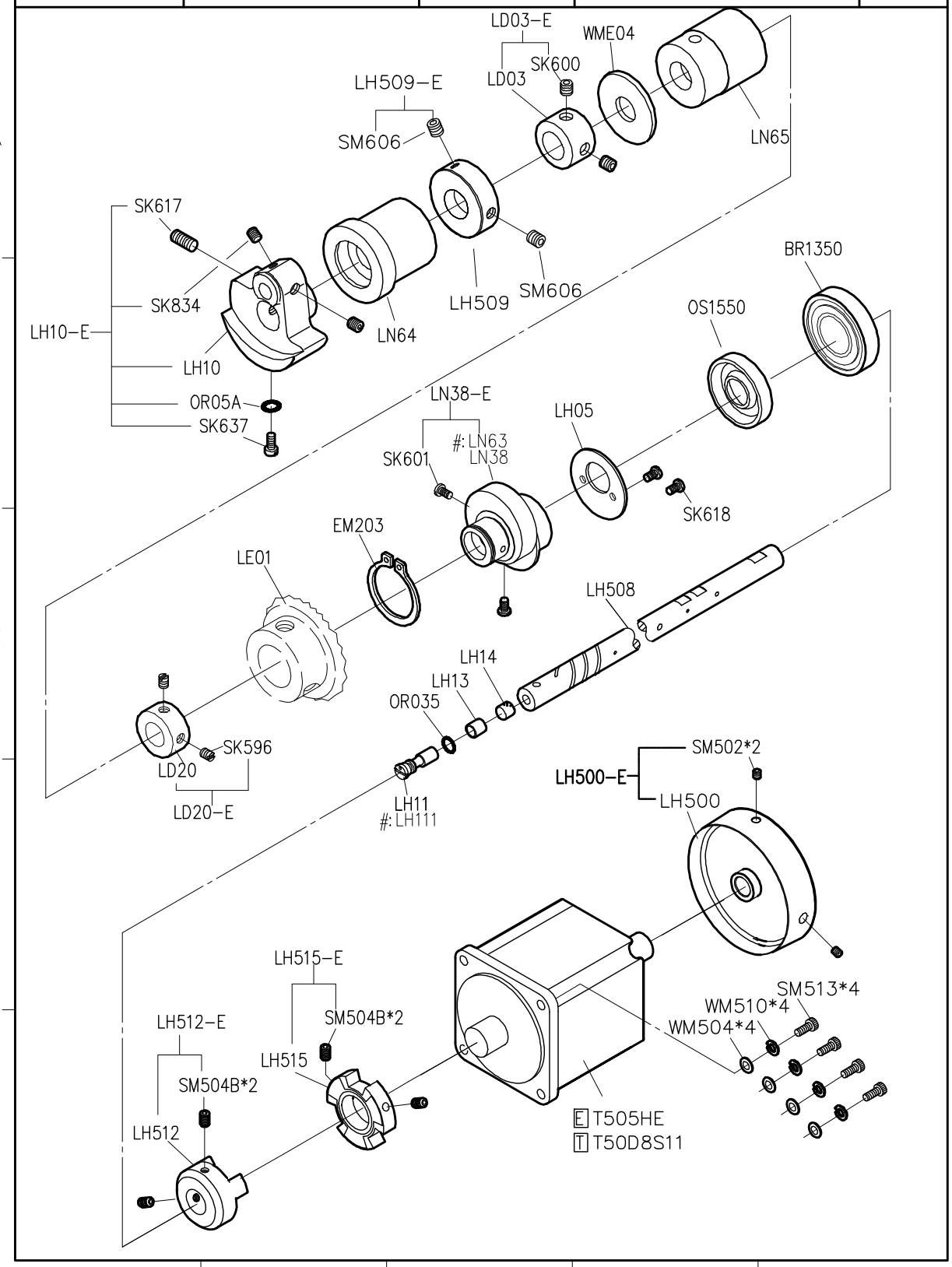

SiRUBA PARTS LIST	Series	Parts Group	Subclass / Remark	Page
	DL918-NM1/NH1	LL		1/1
				Date
				2012/12/27

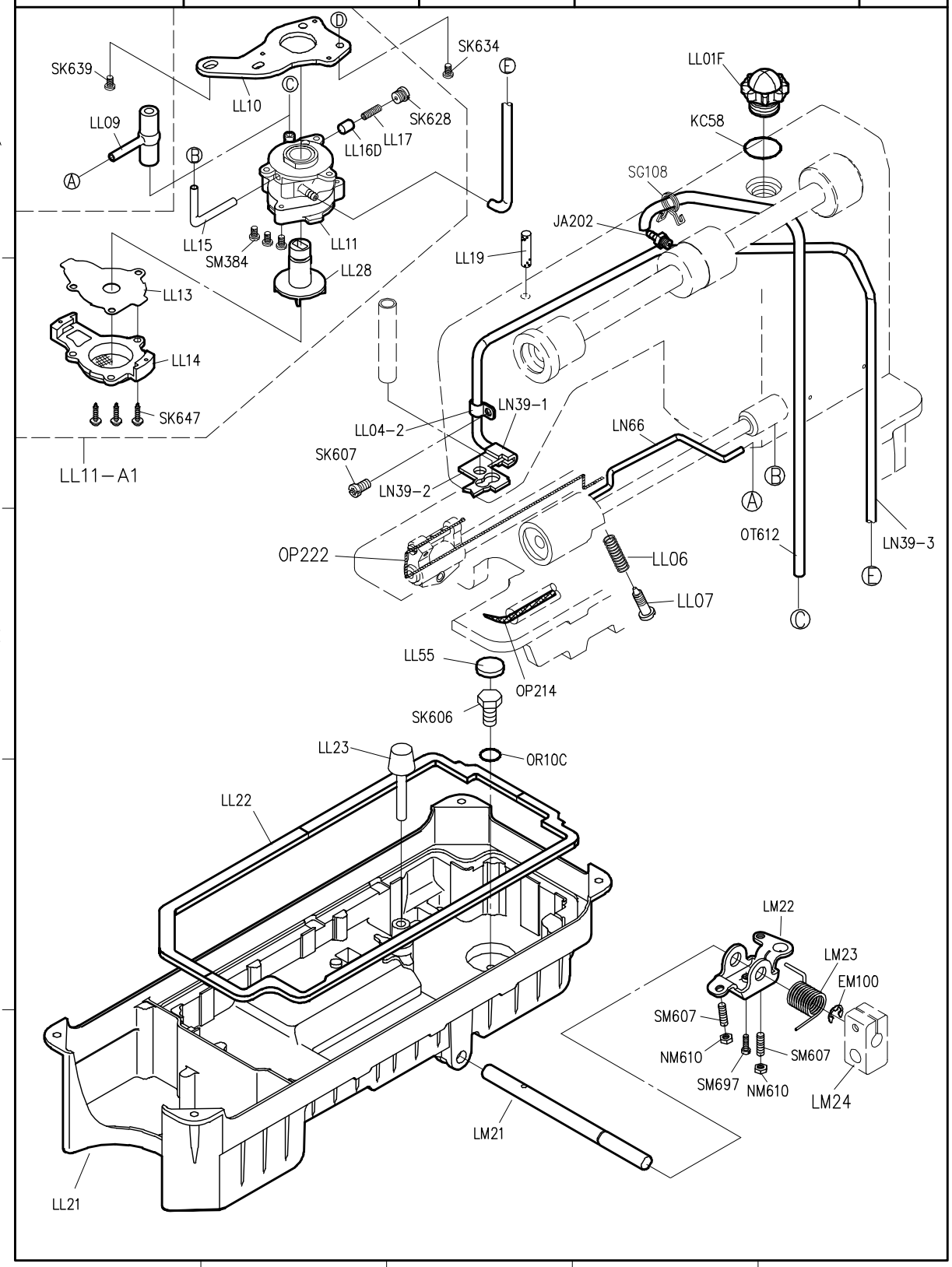

SIRUBA PARTS LIST	Series	Parts Group	Subclass / Remark	Page
	DL918-NM1/NH1	LM		1/1
				Date
				2012/11/01

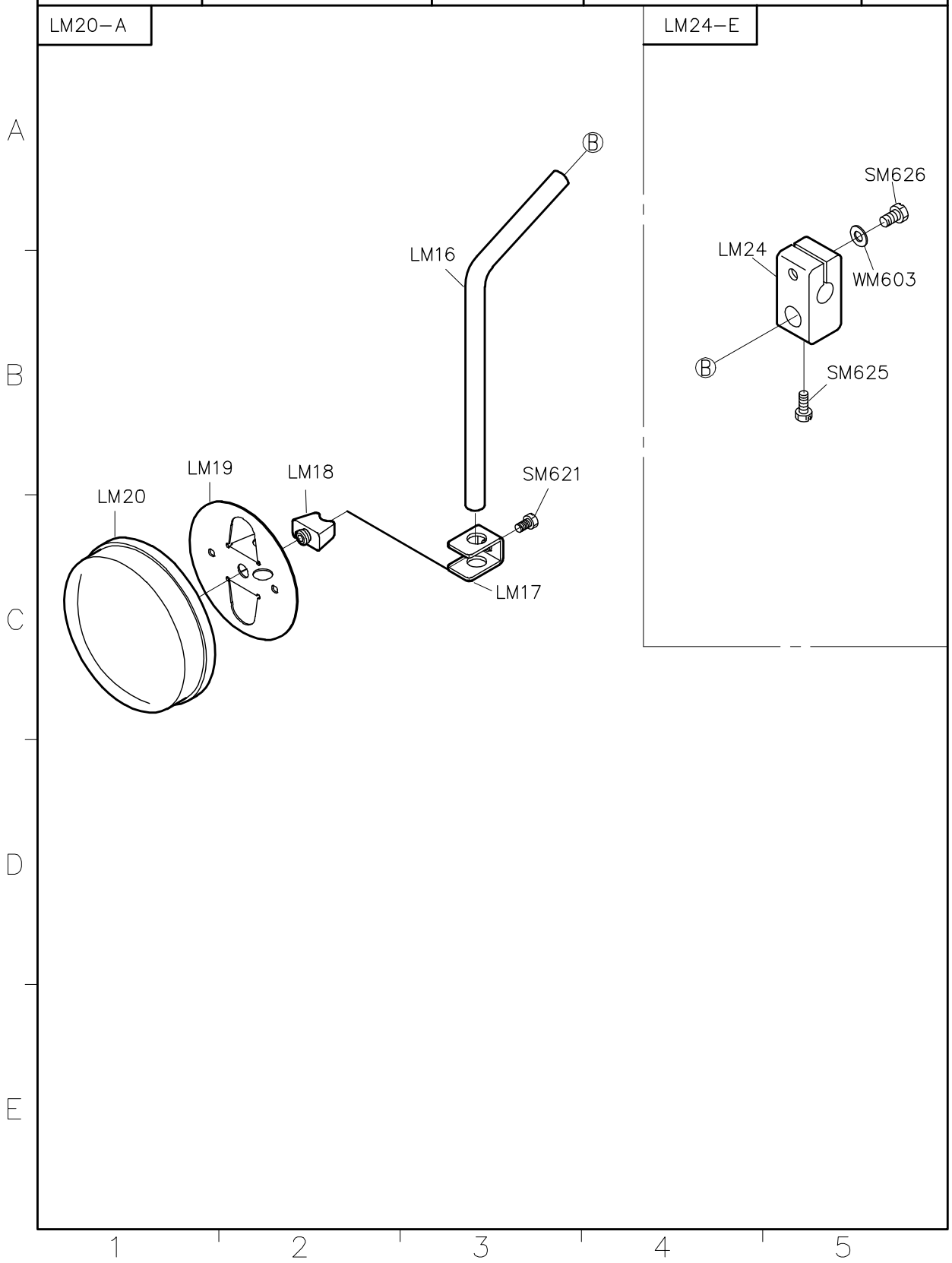

SiRUBA PARTS LIST	Series	Parts Group	Subclass / Remark	Page
	DL918-NM1/NH1	LN		1/1
				Date
				2012/09/12

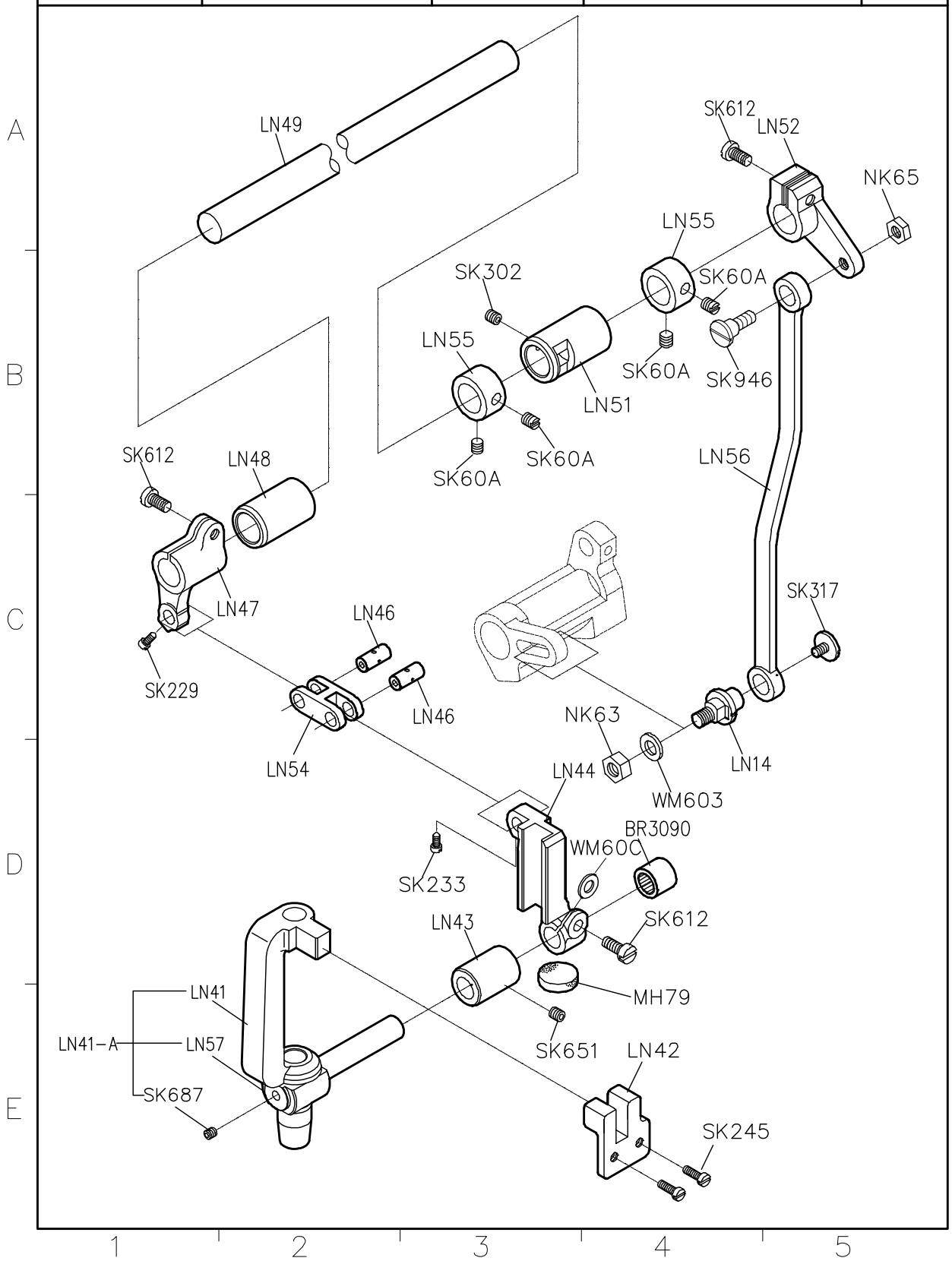

SiRUBA PARTS LIST	Series	Parts Group	Subclass / Remark	Page
	DL918-NM1/NH1	LU	#:Use for NH1	1/7
				Date
				2012/11/01

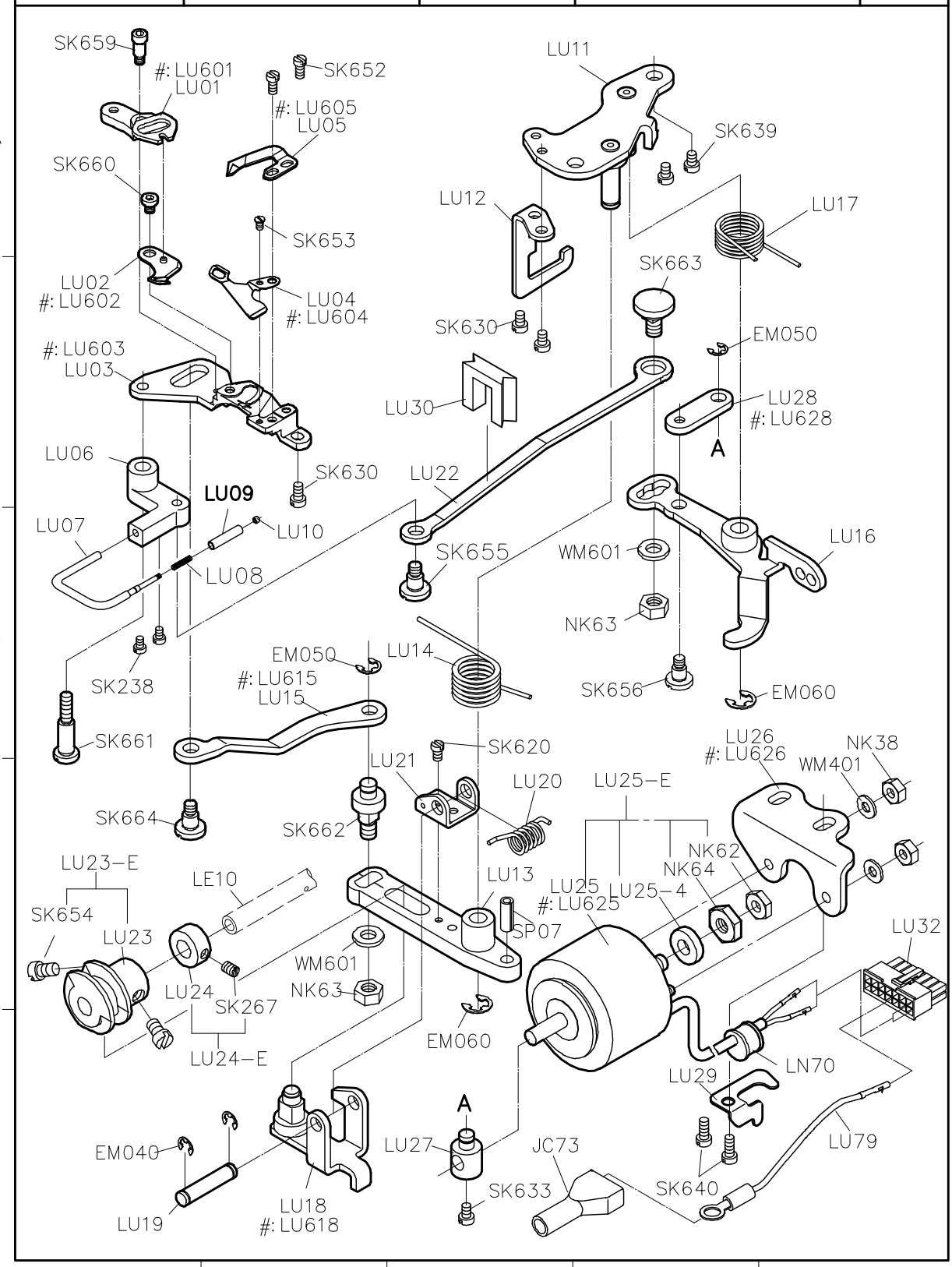

SiRUBA PARTS LIST	Series	Parts Group	Subclass / Remark	Page
	DL918-NM1/NH1	LU		2/7
				Date
				2012/11/01

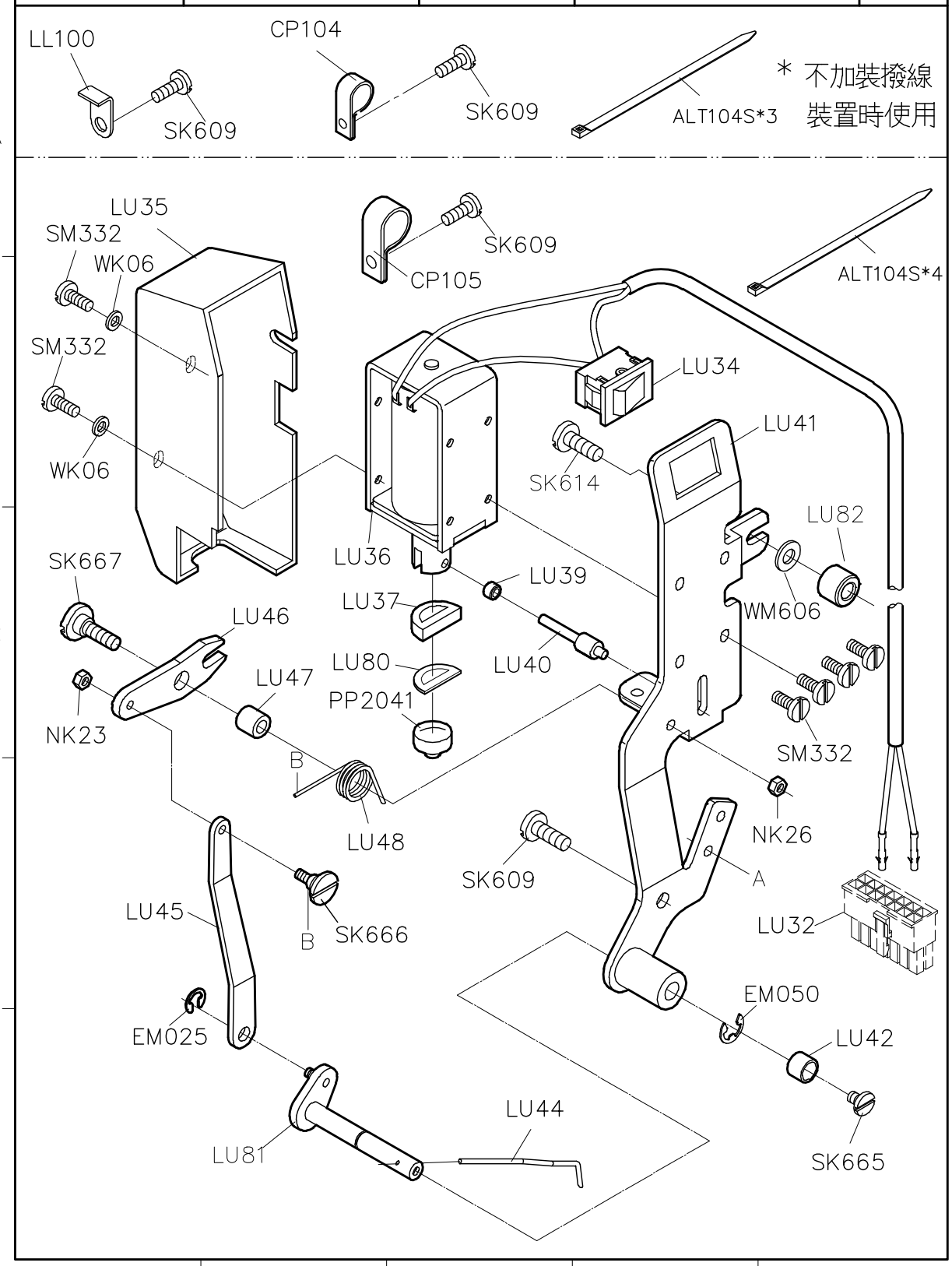

SIRUBA PARTS LIST	Series	Parts Group	Subclass / Remark	Page
	DL918-NM1/NH1	LU		3/7
				Date
				2012/11/01

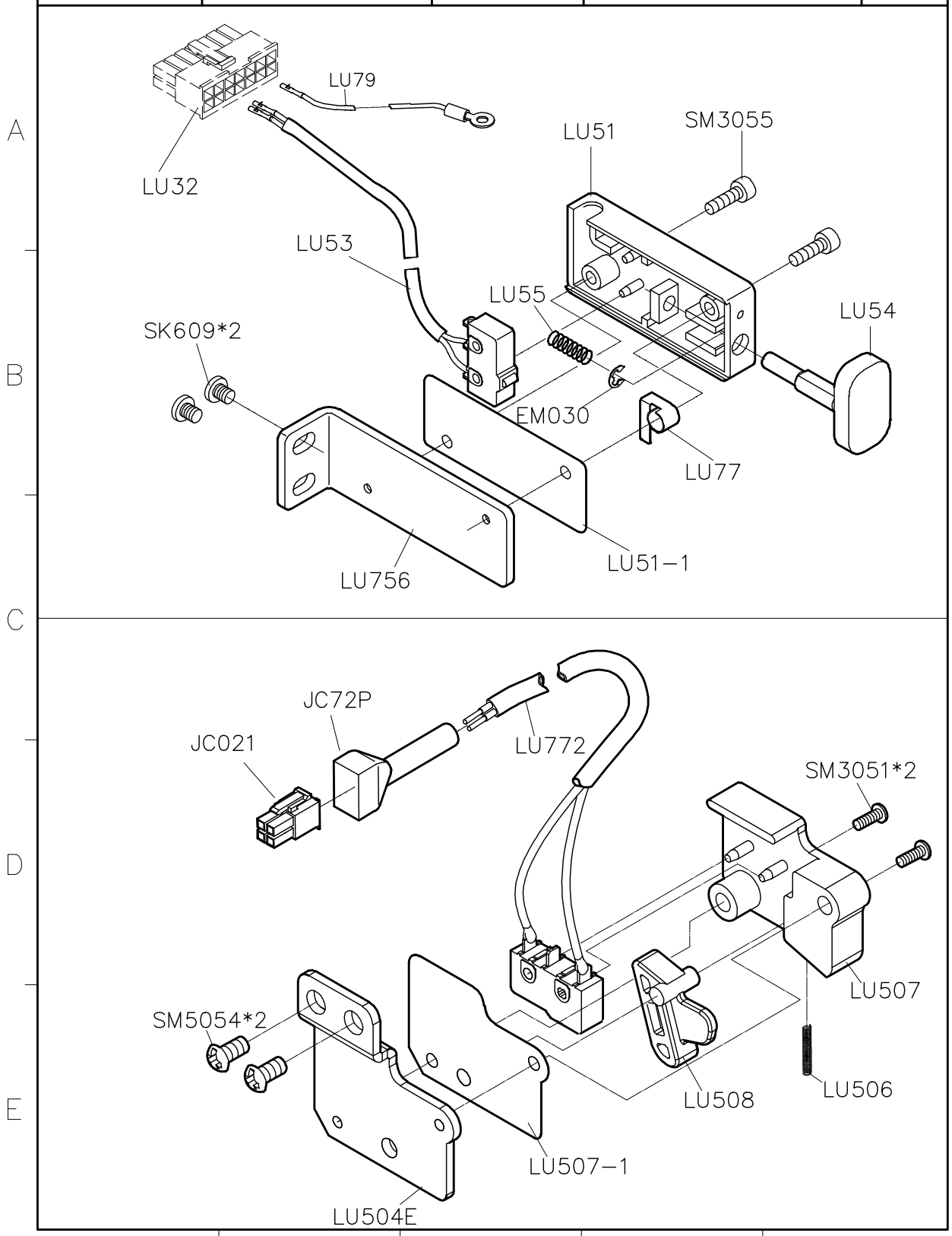

SIRUBA PARTS LIST	Series	Parts Group	Subclass / Remark	Page
	DL918-NM1/NH1	LU		4/7
				Date
				2012/11/01

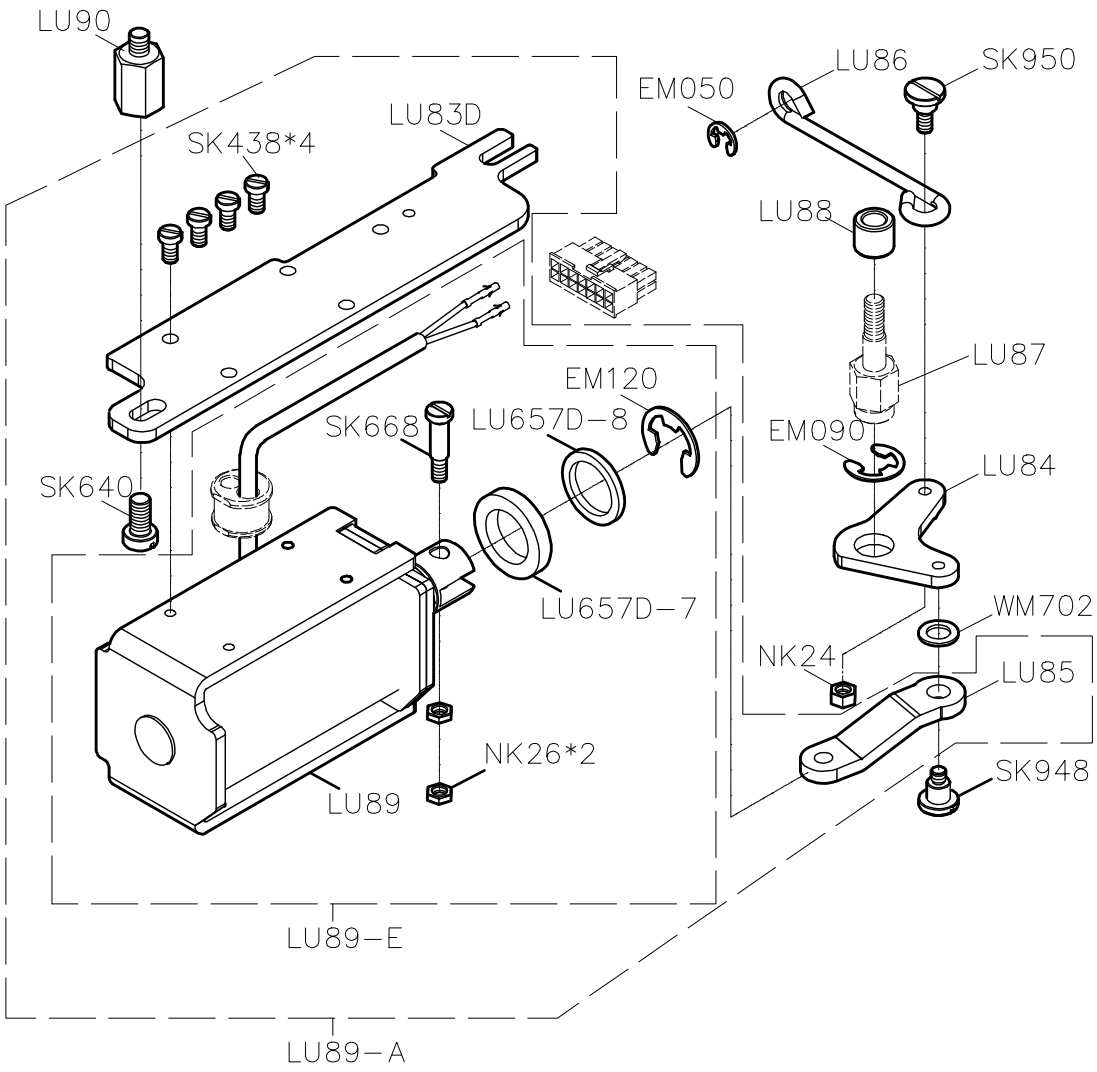

SiRUBA PARTS LIST	Series	Parts Group	Subclass / Remark	Page
	DL918-NM1/NH1	LU	#:Use for NH1	5/7
				Date
				2012/11/01

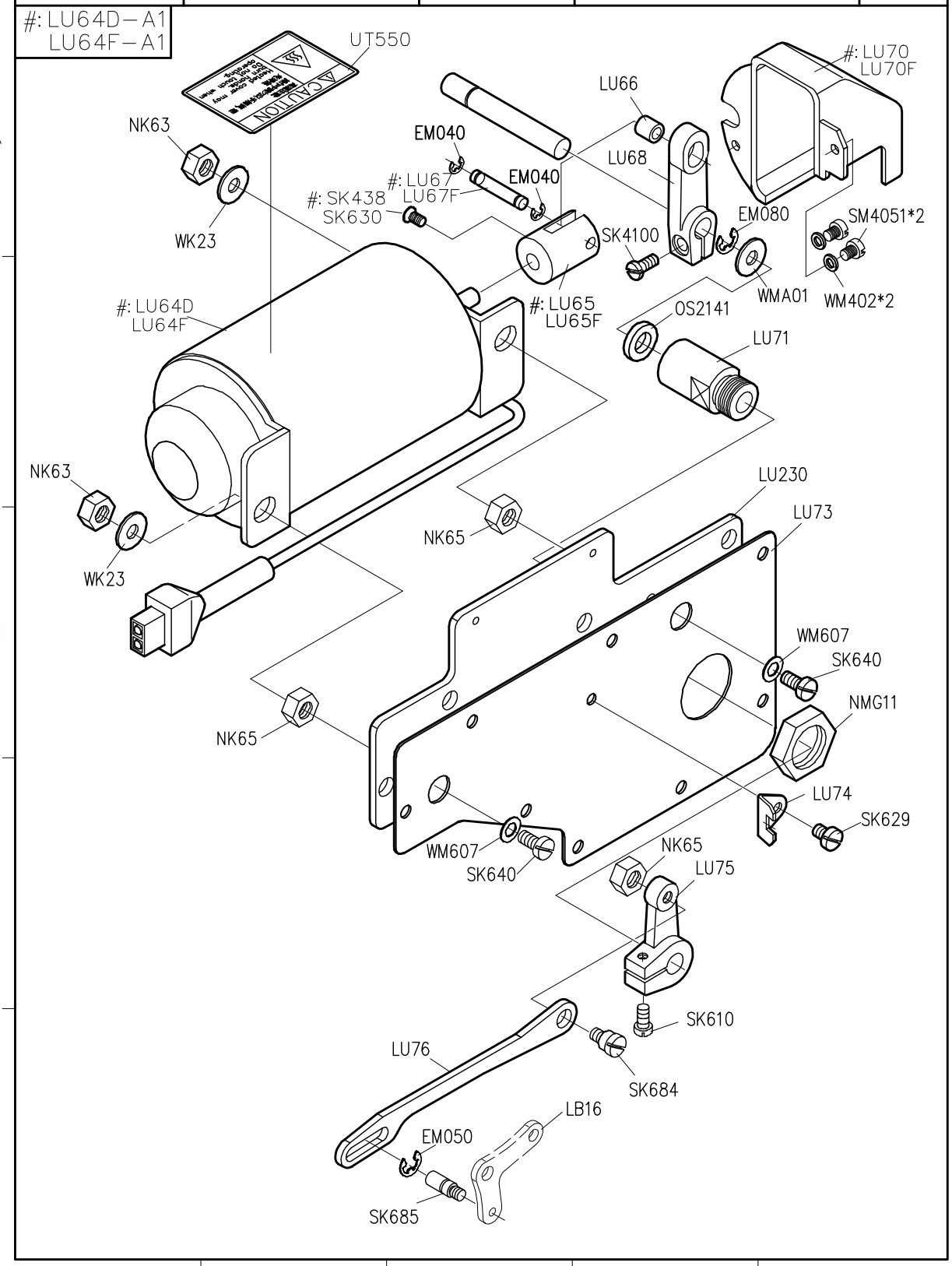

SiRUBA PARTS LIST	Series	Parts Group	Subclass / Remark	Page
	DL918-NM1/NH1	LU		6/7
				Date
				2012/11/01

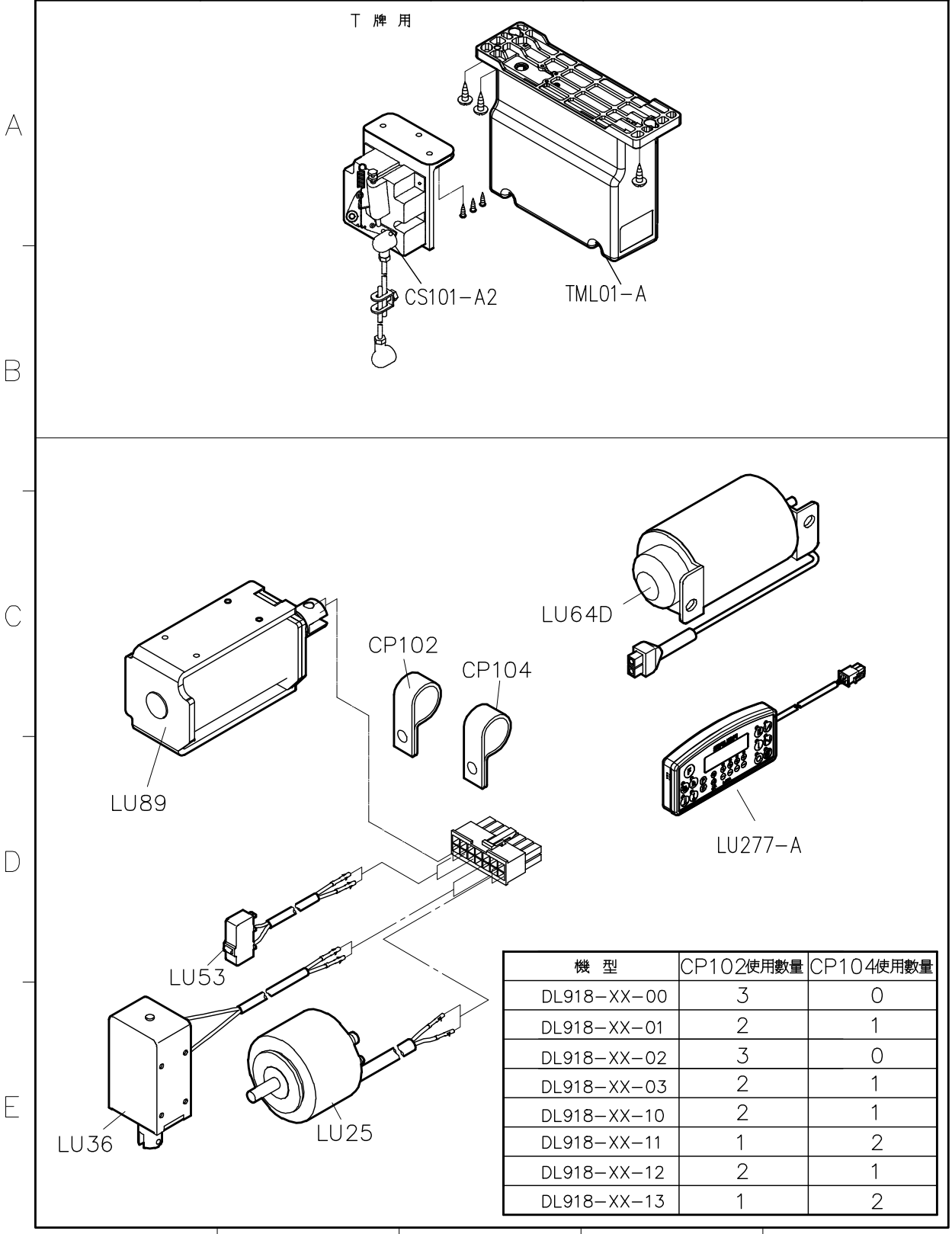

機 型	CP102使用數量	CP104使用數量
DL918-XX-00	3	0
DL918-XX-01	2	1
DL918-XX-02	3	0
DL918-XX-03	2	1
DL918-XX-10	2	1
DL918-XX-11	1	2
DL918-XX-12	2	1
DL918-XX-13	1	2

SiRUBA PARTS LIST	Series	Parts Group	Subclass / Remark	Page
	DL918-NM1/NH1	LU		7/7
				Date
				2012/11/01

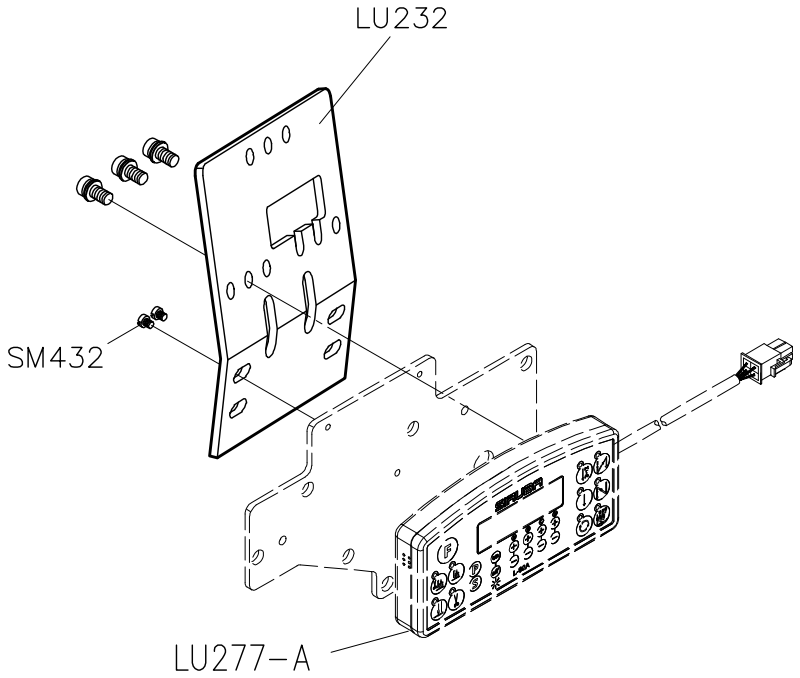

註： 此 部 份 置 於 配 件 箱 內

代碼 NO.	操作面板 Control Panel	代碼 NO.	自動切線 Auto THREAD Trimmer	快速倒縫 Reverse Feeding	撥線桿 Wiper	自動抬押具 Auto Lifer
1	LU277-A	0	v	v	–	–
		1	v	v	V	–
		2	v	v	–	v
		3	v	v	v	v
0	–	0	v	v	–	–
		1	v	v	V	–
		2	v	v	–	v
		3	v	v	v	v

SiRUBA PARTS LIST	Series	Parts Group	Subclass / Remark	Page
	DL918-NM1/NH1	LW		1/1
				Date
				2012/11/01

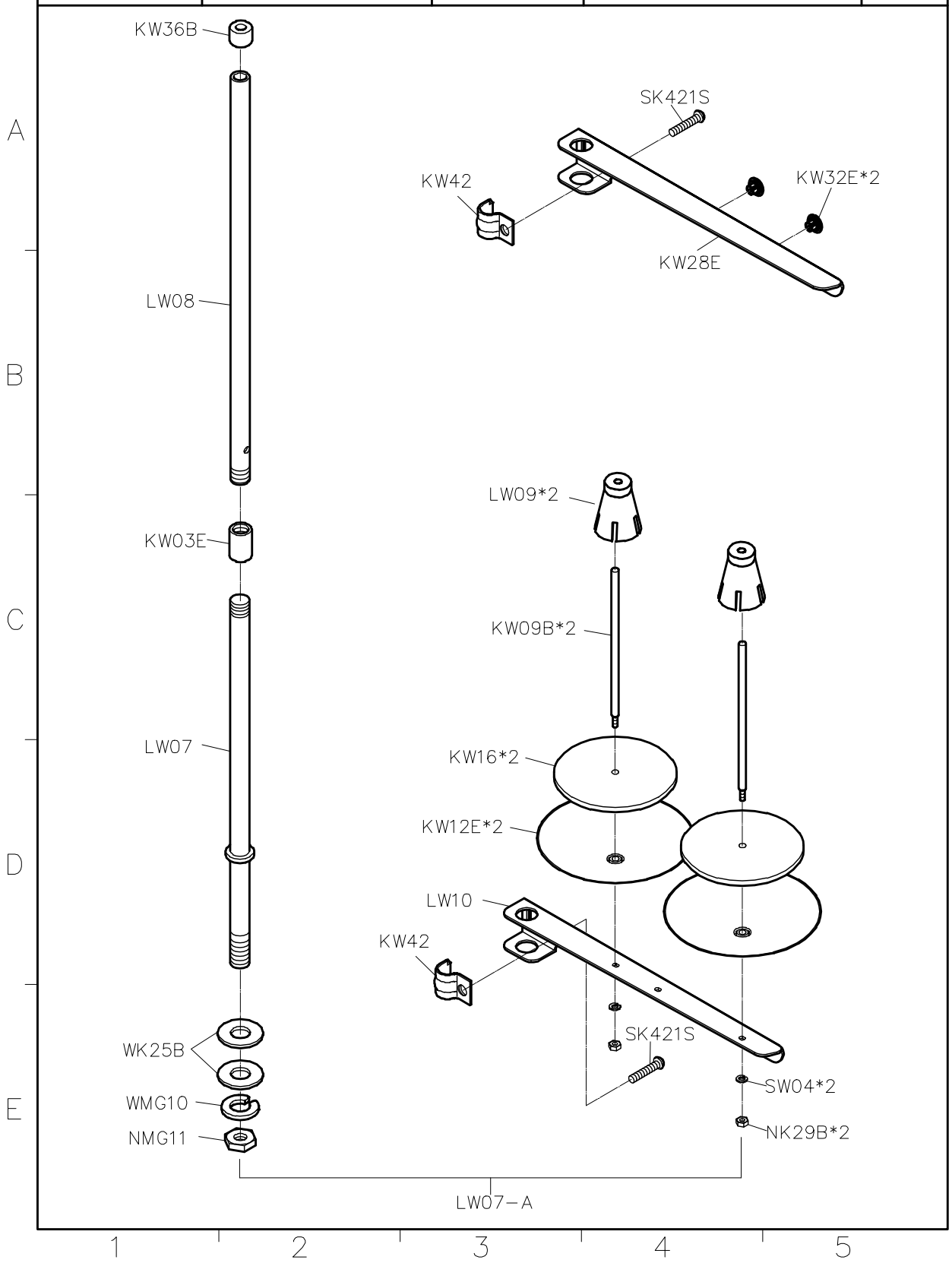

SIRUBA PARTS LIST	Series	Parts Group	Subclass / Remark	Page
	DL918-NM1/NH1	LY		1/1
				Date
				2012/11/01

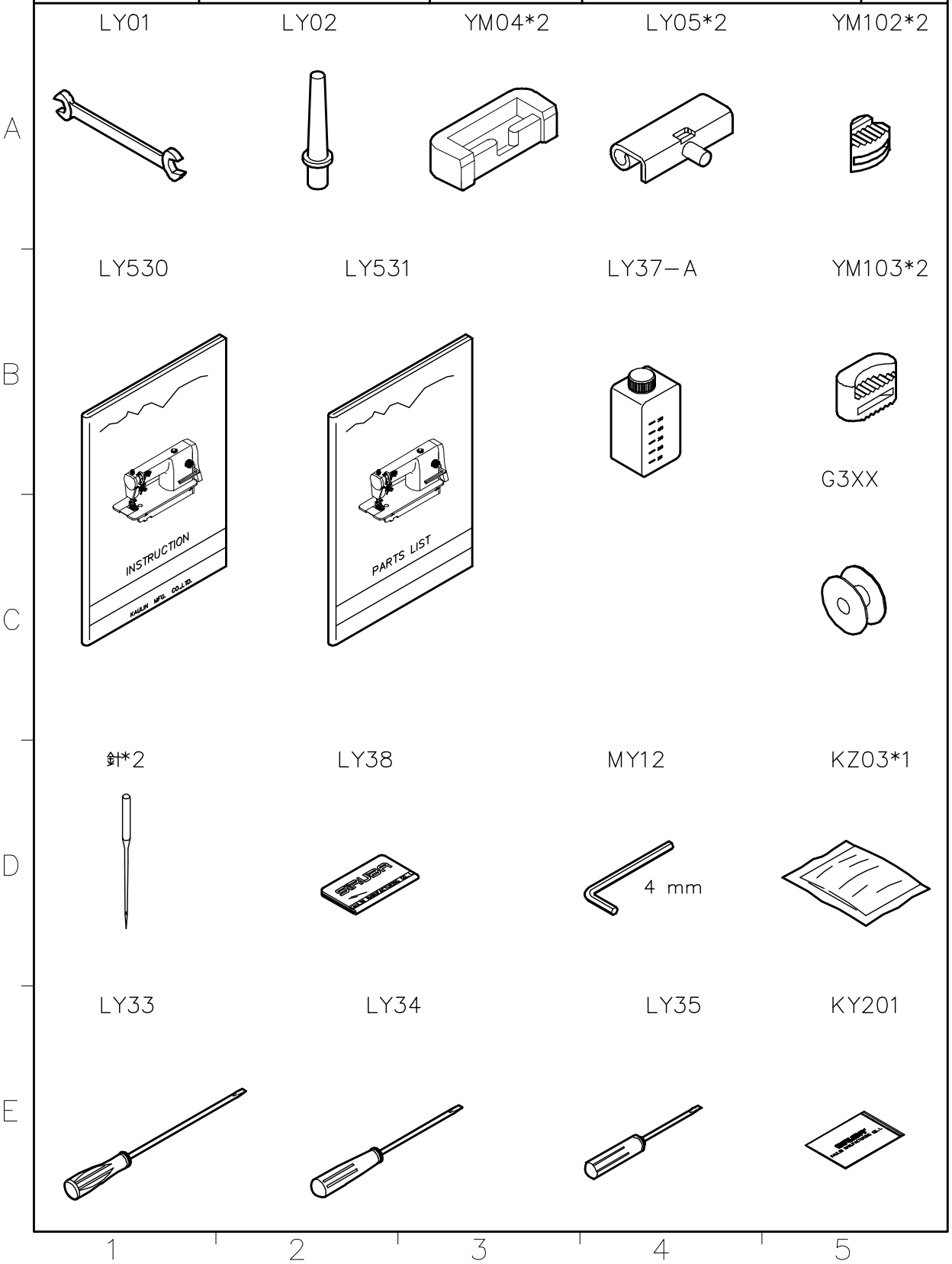

SiRUBA PARTS LIST	Series	Parts Group	Subclass / Remark	Page
	DL918-NM1/NH1	LZ		1/1
				Date
				2012/12/22

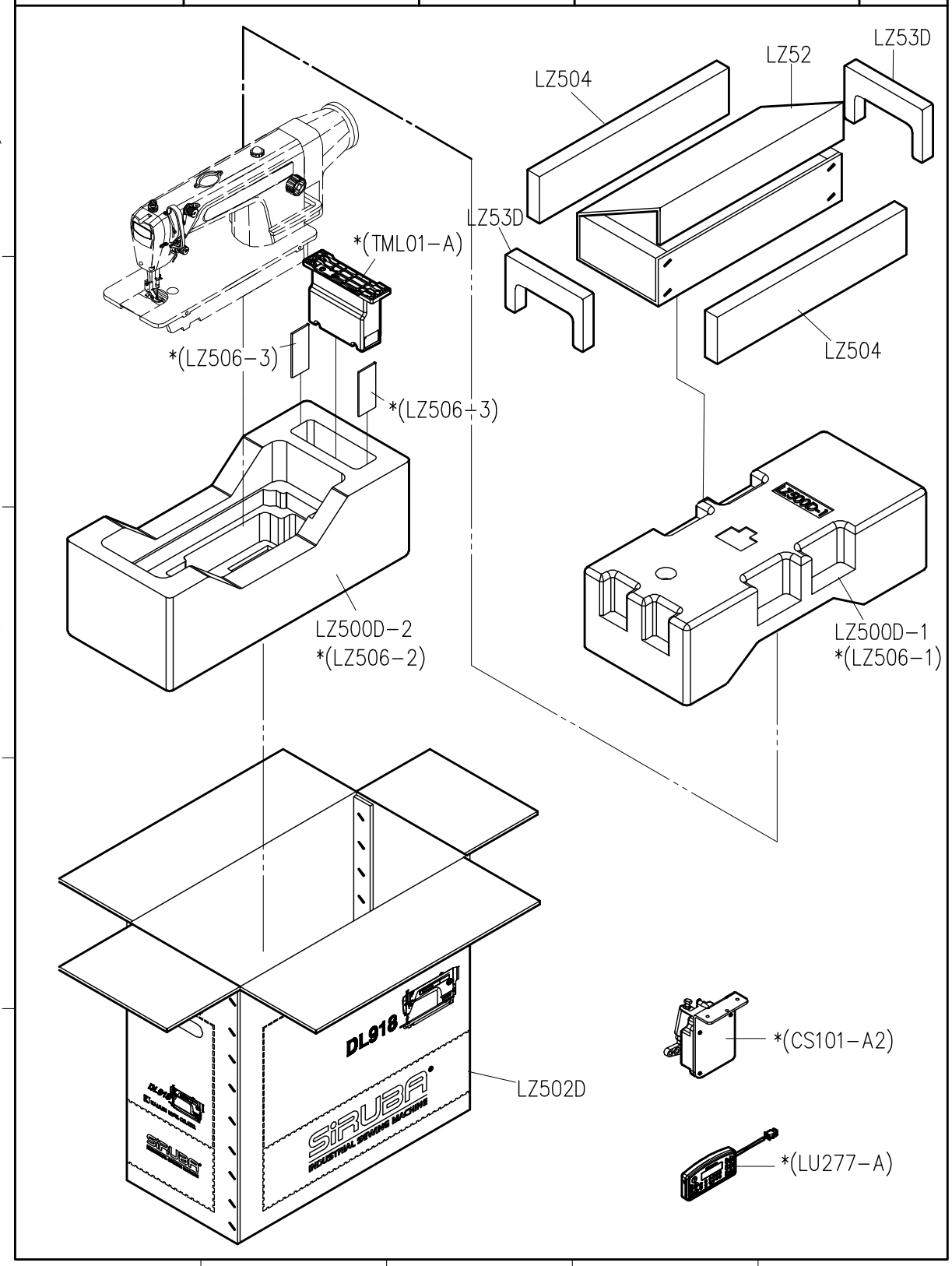

SIRUBA TABLE CUT - OUT	Series	Item Code	Subclass / Remark	Mounting
	DL918/DL7000	DL918T-T1		Fully-submerged
				Date
				2013/01/01
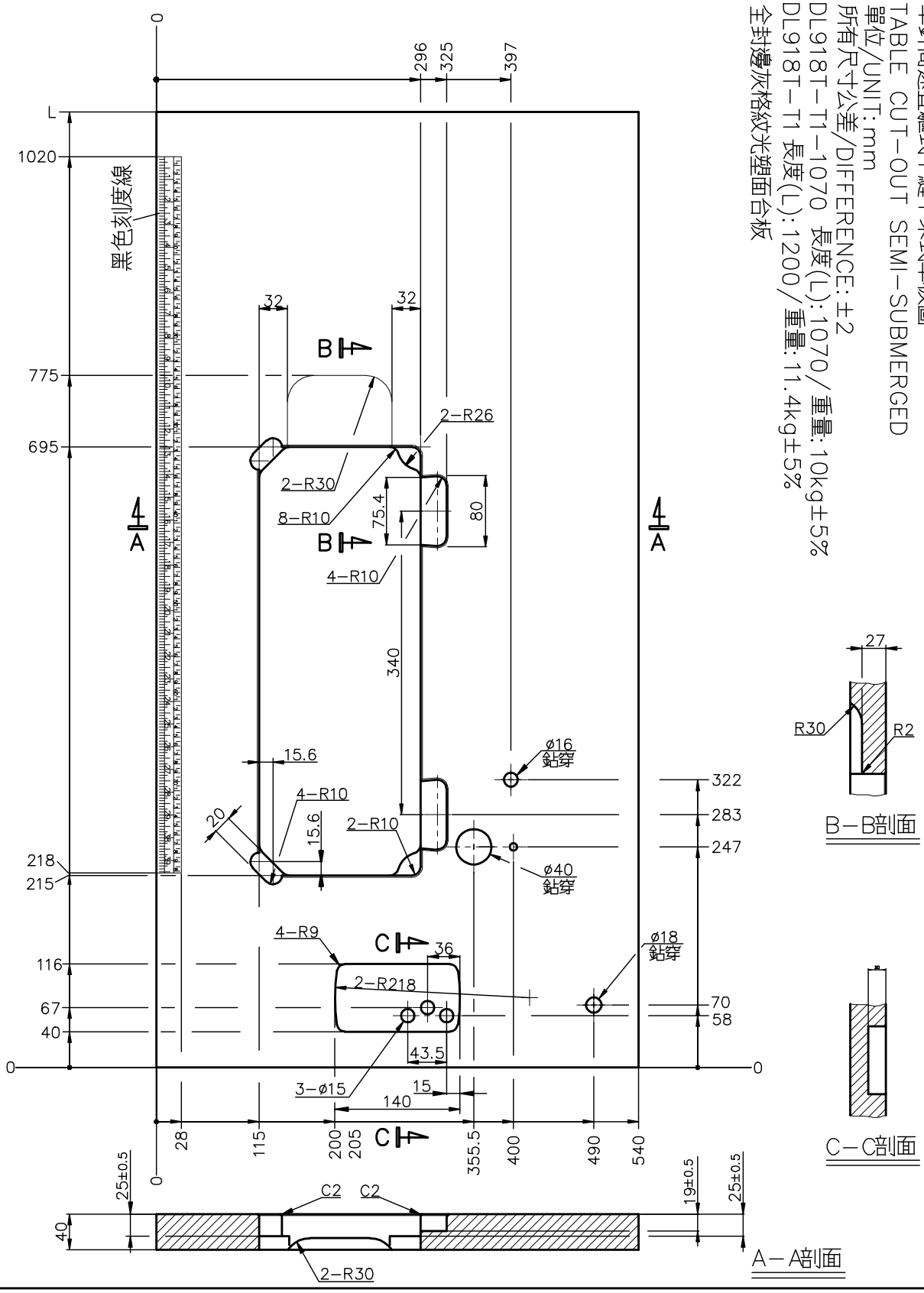
單針高速直驅式平縫下乘式車板圖
TABLE CUT-OUT SEMI-SUBMERGED
單位/UNIT:mm
所有尺寸公差/DIFFERENCE:±2
DL918T-T1-1070 長度(L):1070/重量:10kg±5%
DL918T-T1 長度(L):1200/重量:11.4kg±5%
全封邊灰格紋光塑面台板