700K PARTS LIST FOR BK GROUP P.1/1

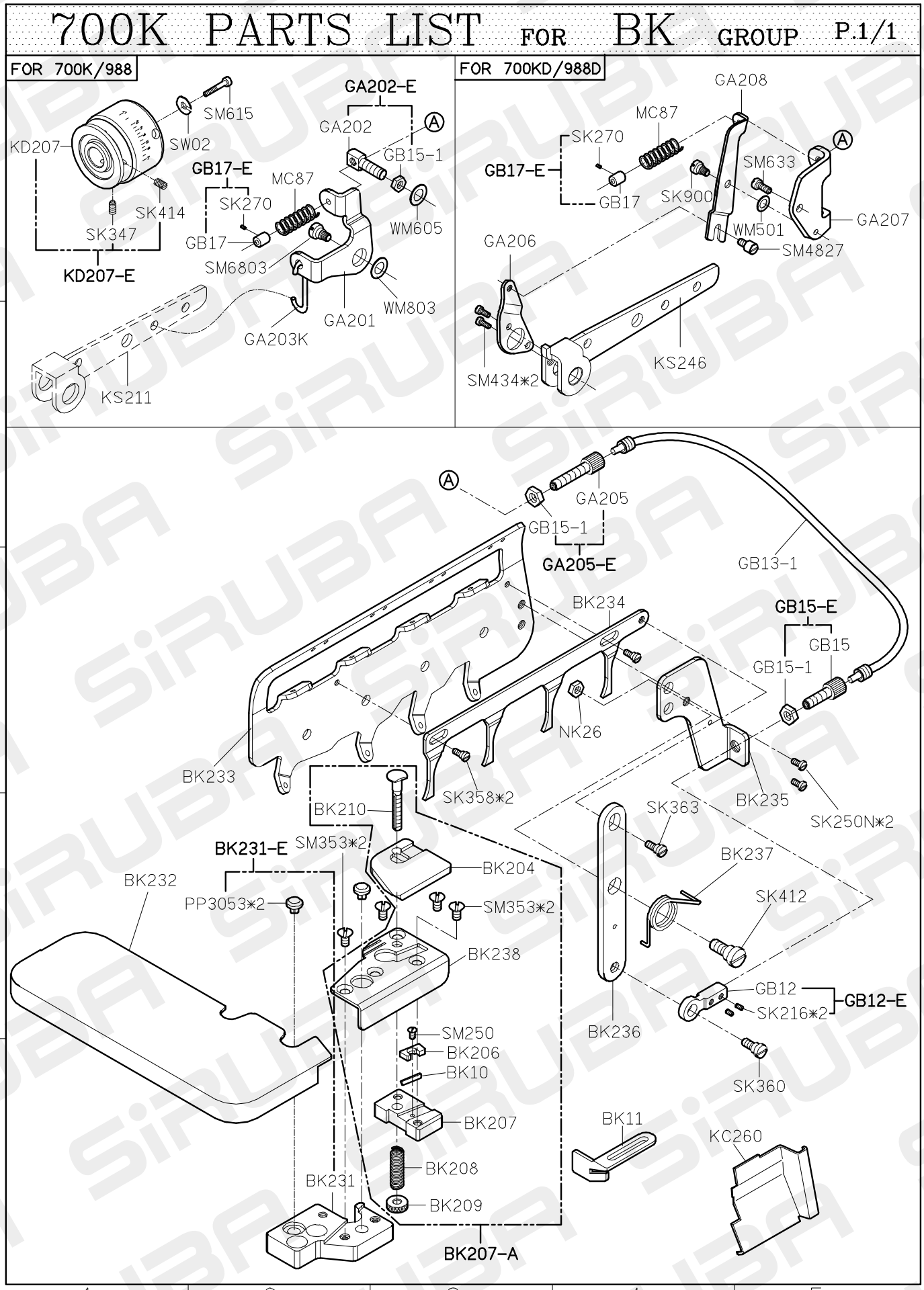

FOR 700K/700KD/988/988D

10/08/20

700K PARTS LIST FOR CT GROUP

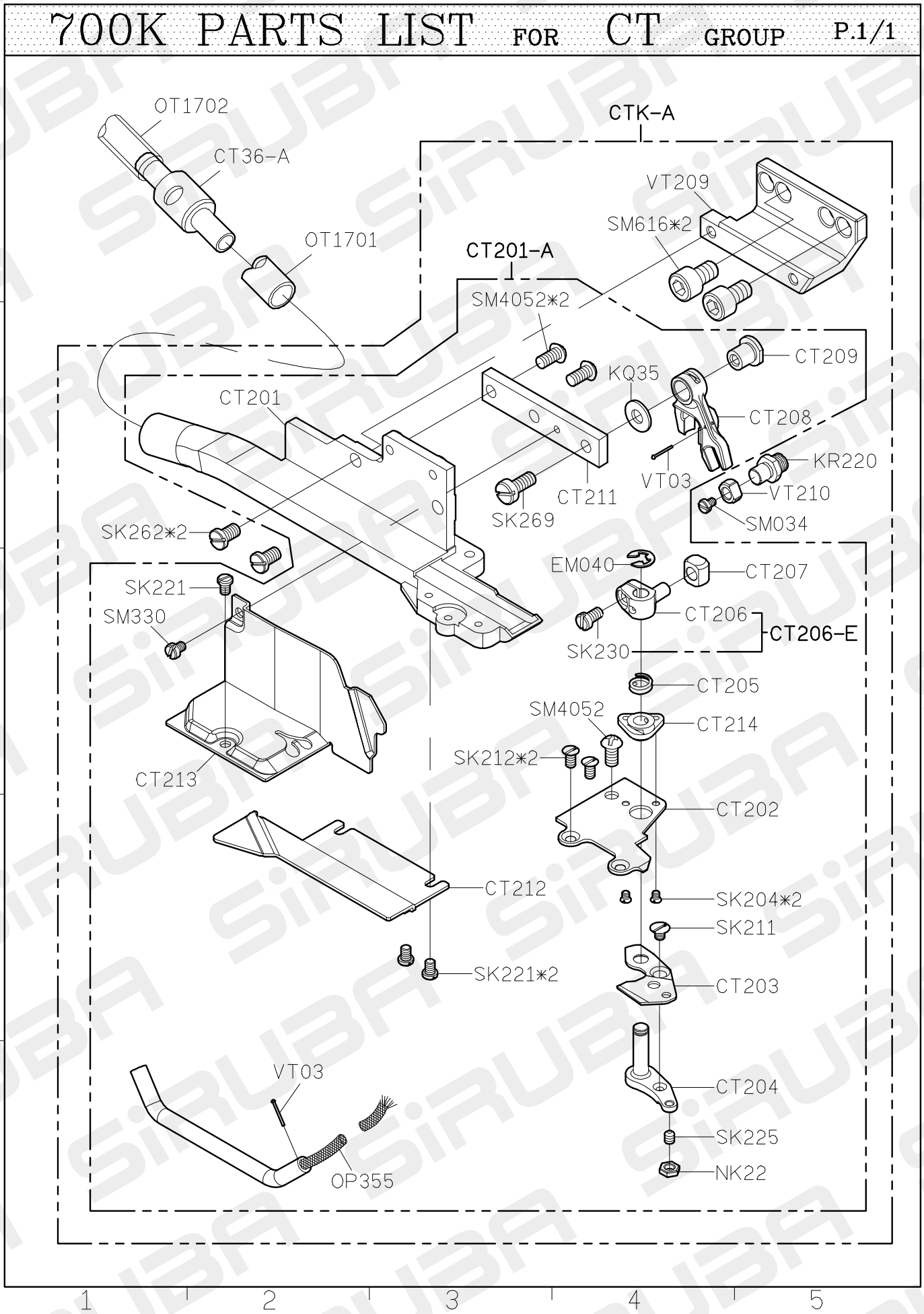

FOR 700K/700KD/988/988D

10/08/20

700K PARTS LIST FOR EC−K GROUP P.1/4

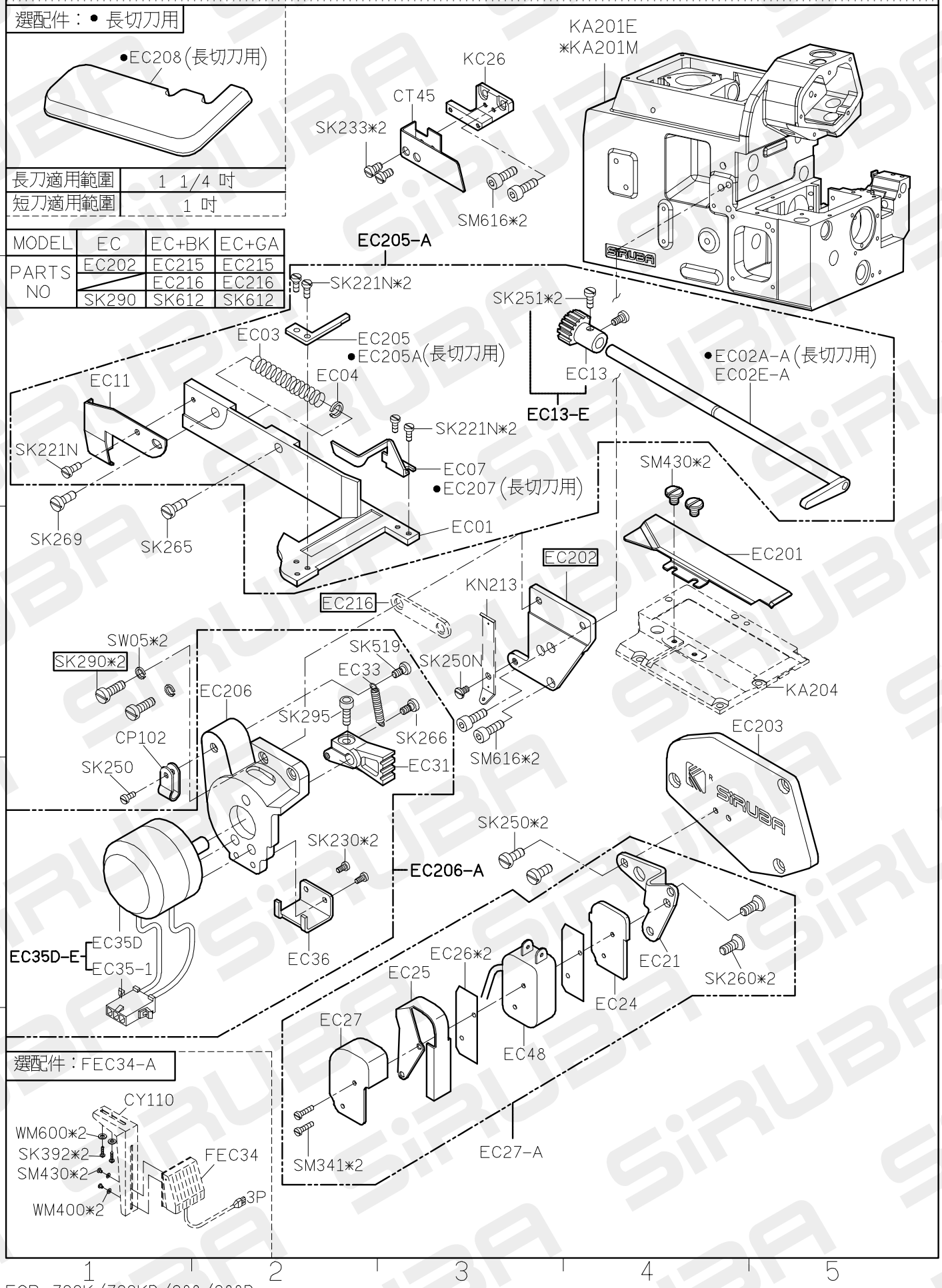

FOR 700K/700KD/988/988D

*USE FOR 700KD/988D

10/09/06

700K PARTS LIST FOR EC−K GROUP

FE202−A

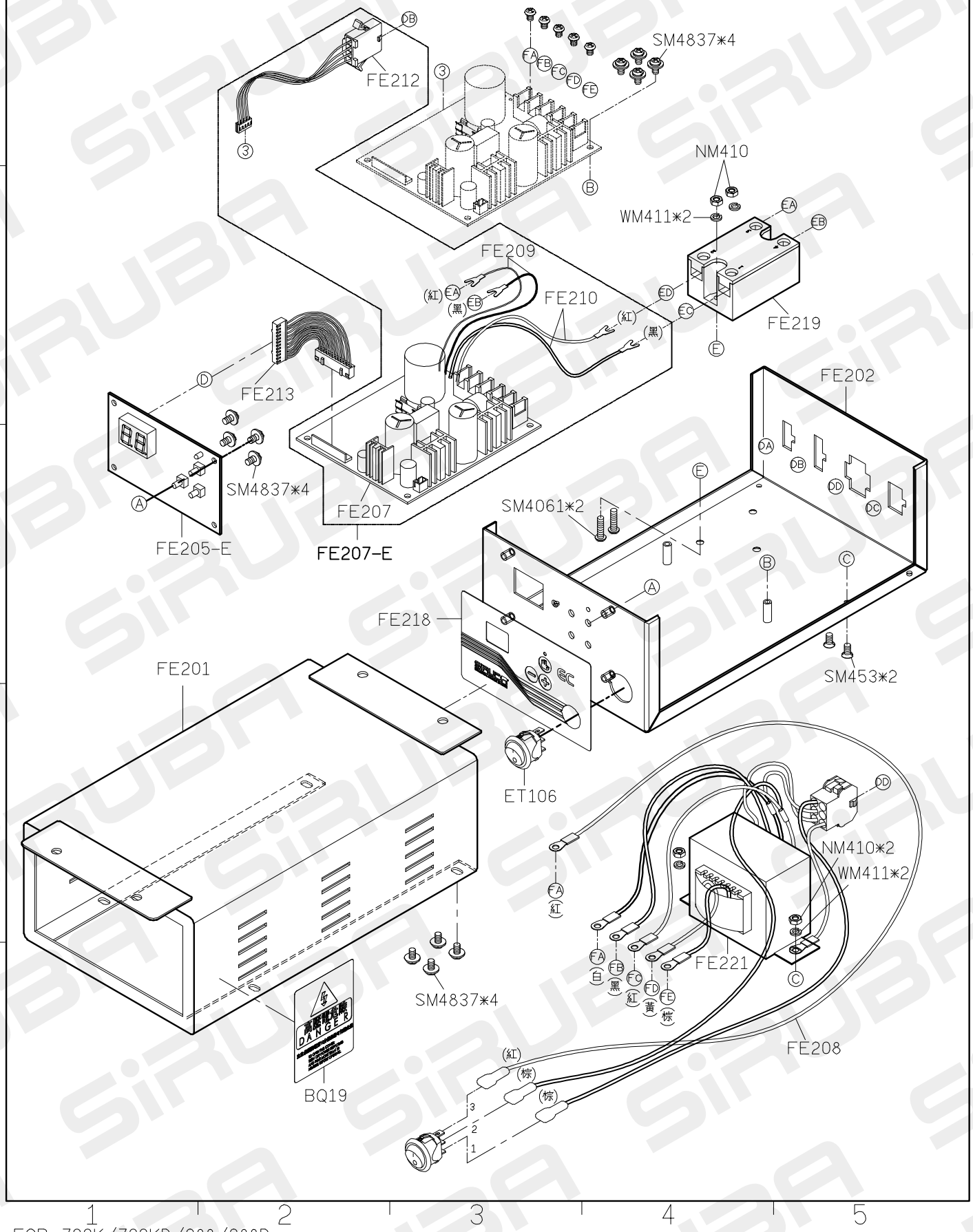

FOR 700K/700KD/988/988D

*USE FOR 700KD/988D

10/09/06

700K PARTS LIST FOR EC-K GROUP

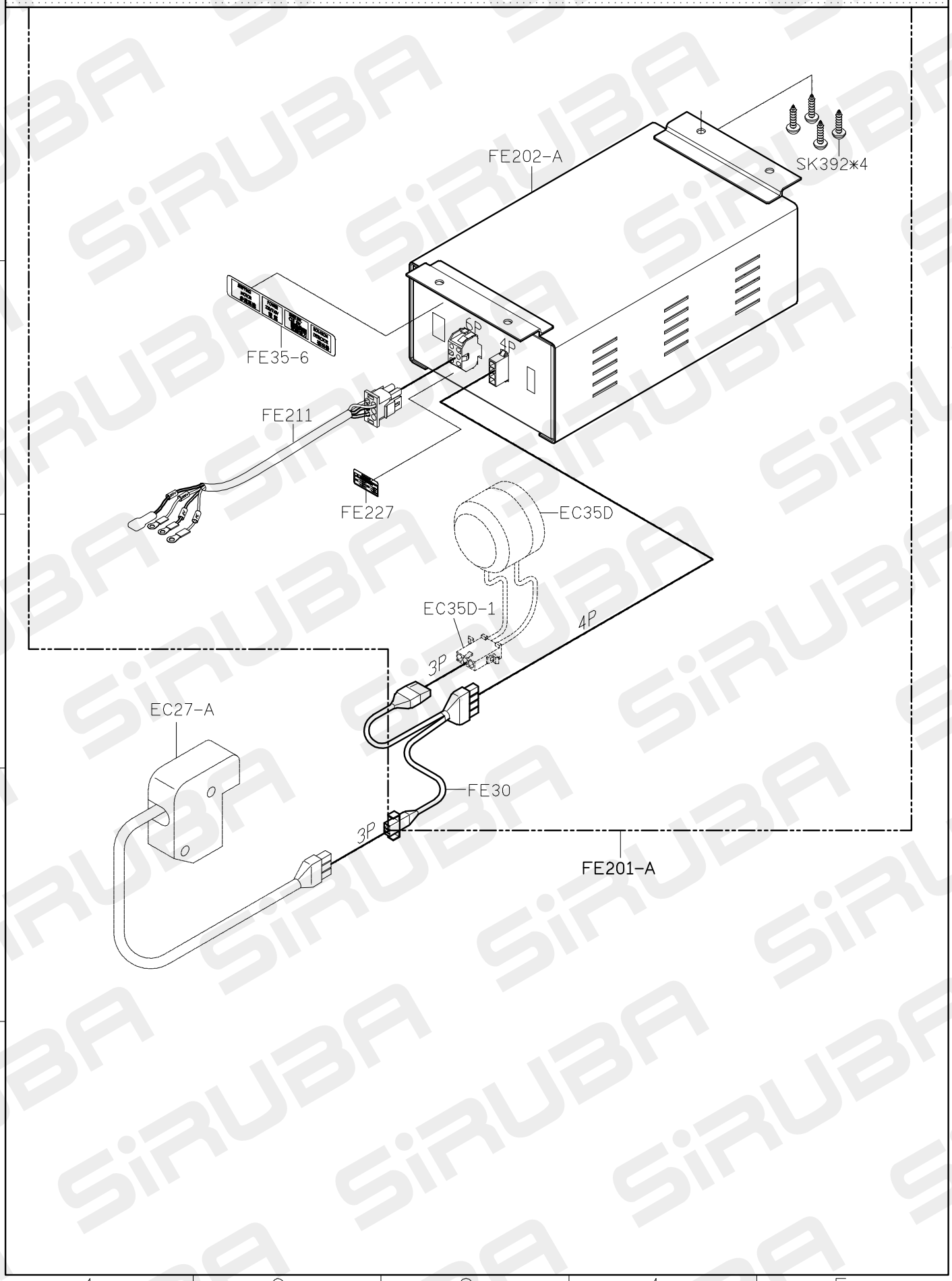

FOR 700K/700KD/988/988D

*USE FOR 700KD/988D

10/09/06

700K PARTS LIST FOR EC-K GROUP

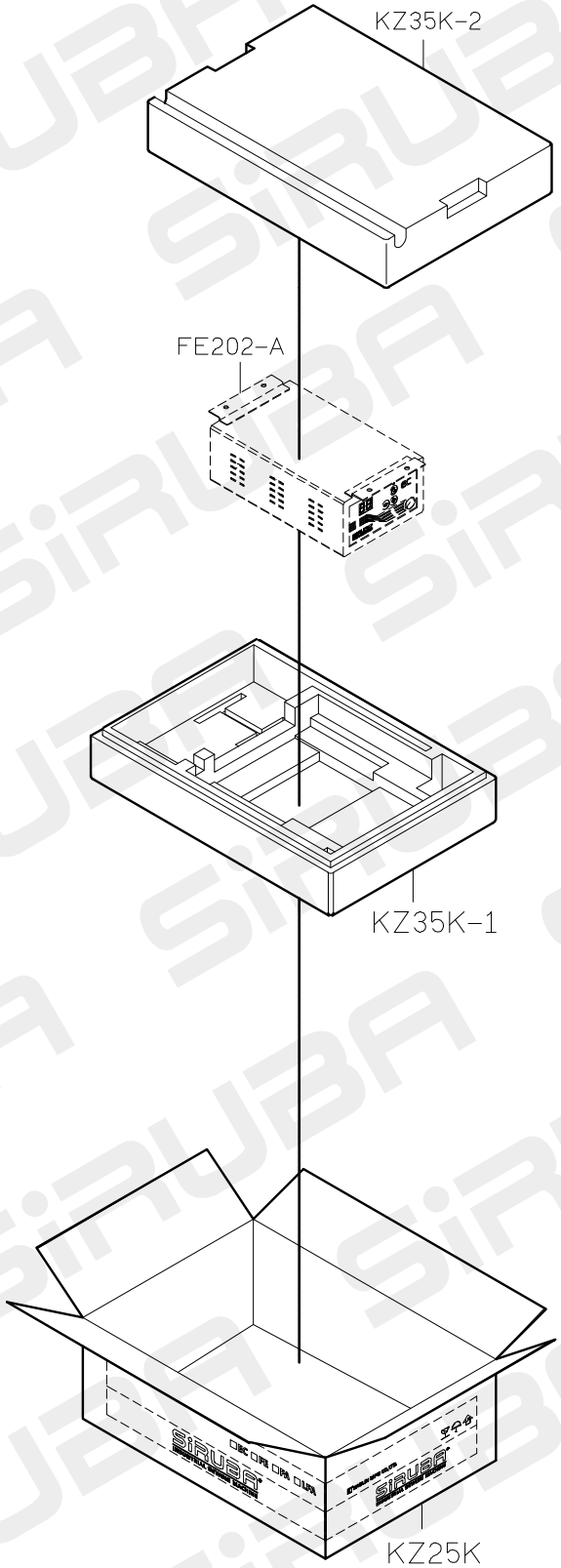

FOR 700K/700KD/988/988D

*USE FOR 700KD/988D

10/09/06

700K PARTS LIST FOR ET-K GROUP 1/3

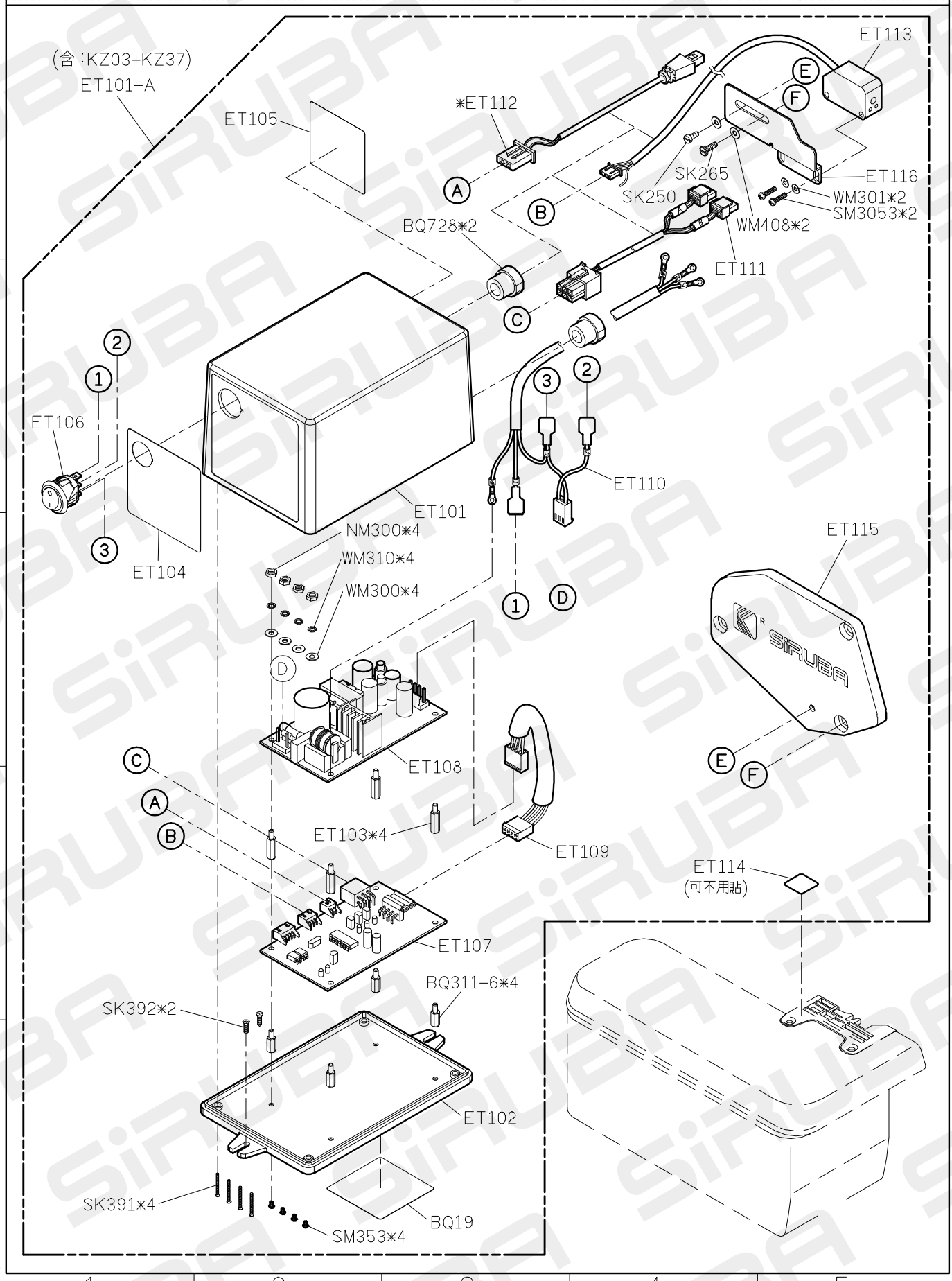

FOR 700K/700KD/988/988D
*USE FOR 700K/988

2010/04/14

700K PARTS LIST FOR ET-K GROUP 2/3

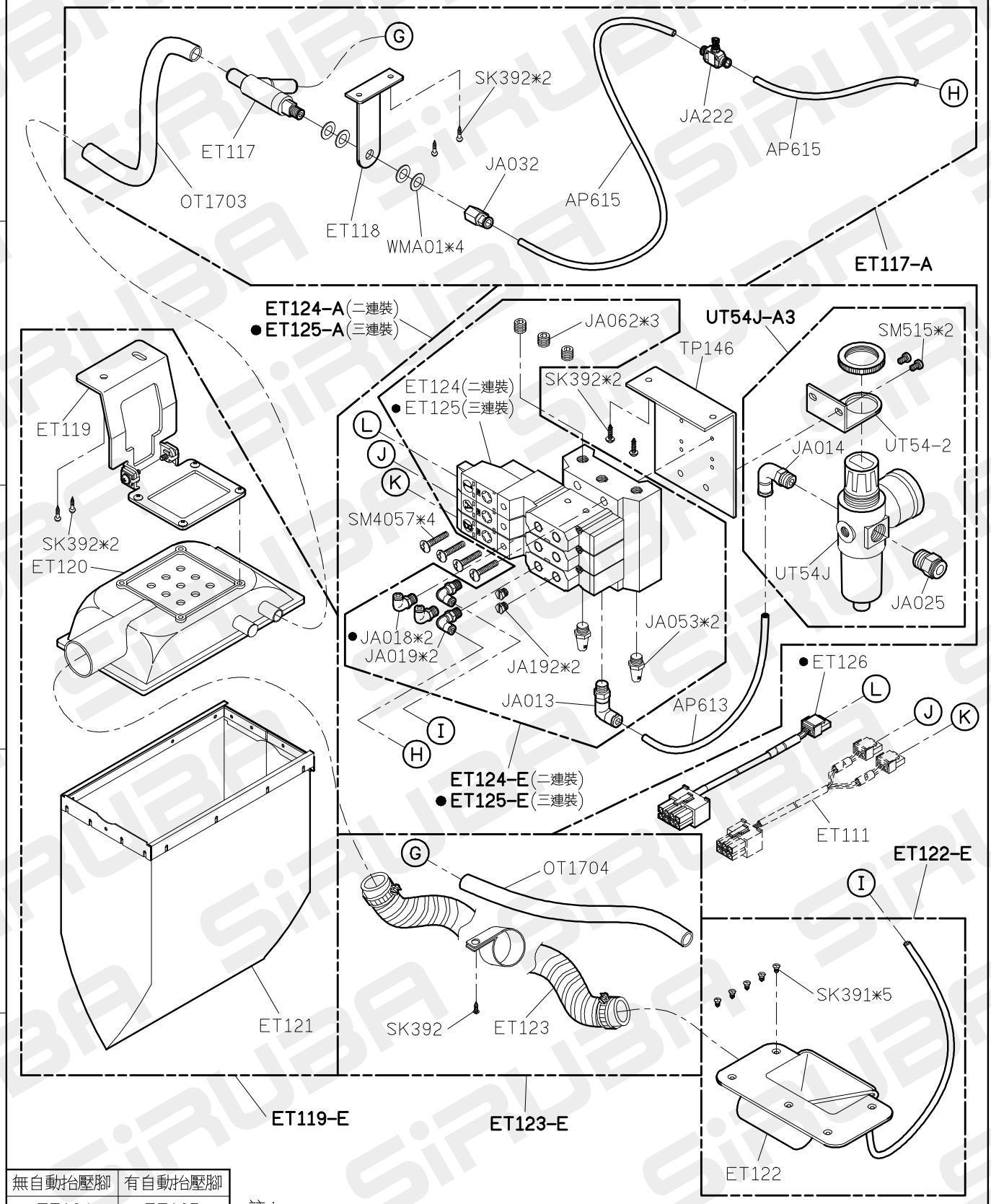

無自動抬壓腳	有自動抬壓腳
ET124	●ET125
	●ET126
	●JA018*2

註：

ET119-A=ET117-A+ET119-E+ET122-E+ET123-E

賀欣料號：VD-6 不含：ET101-A,ET124-A(ET125-A),ET126,ET-K,KZ25K

700K PARTS LIST FOR ET−K GROUP 3/3

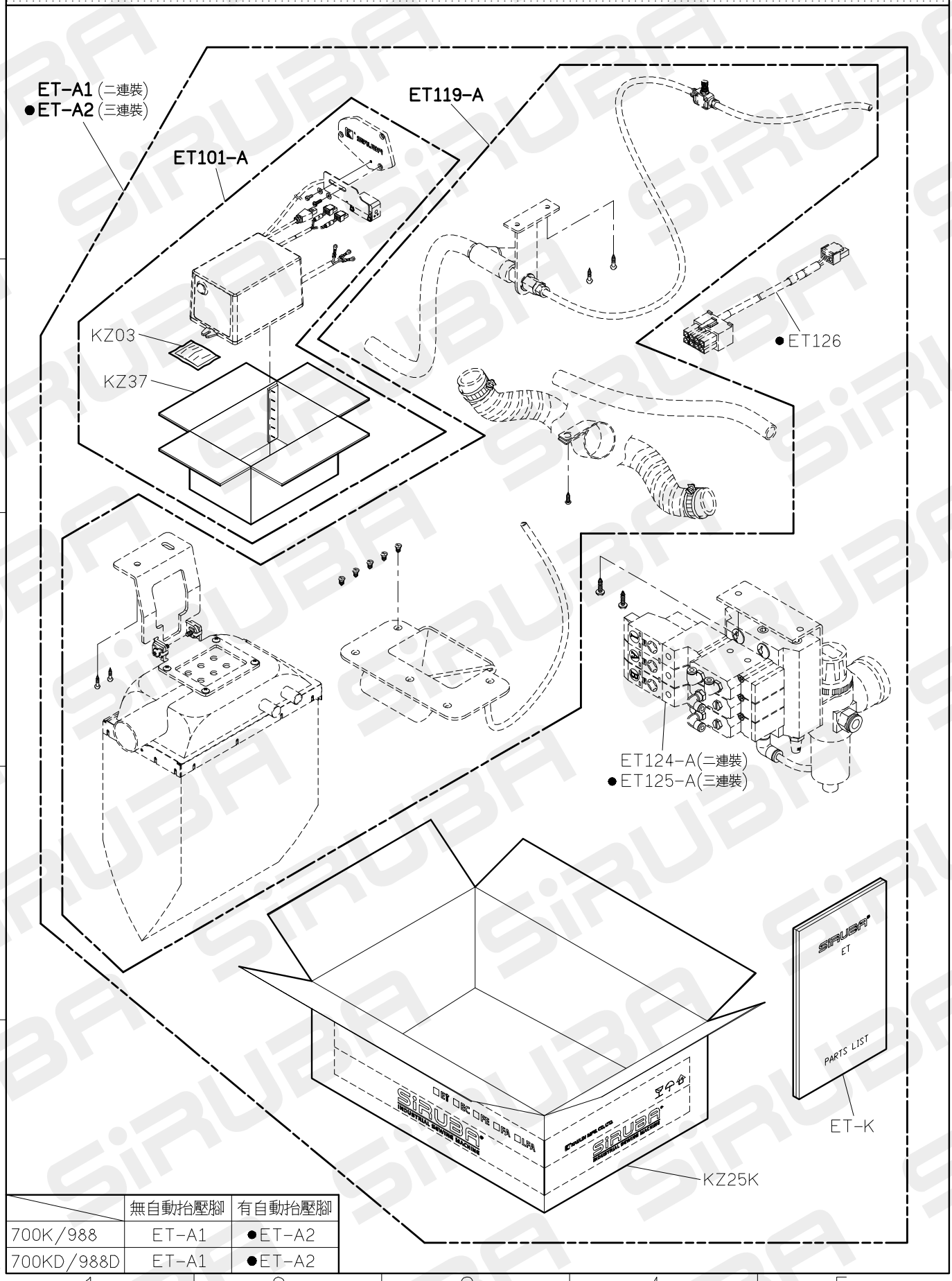

	無自動抬壓腳	有自動抬壓腳
700K/988	ET−A1	●ET−A2
700KD/988D	ET−A1	●ET−A2

FOR 700K/700KD/988/988D

2010/04/14

700K PARTS LIST FOR ET-K GROUP 1/3

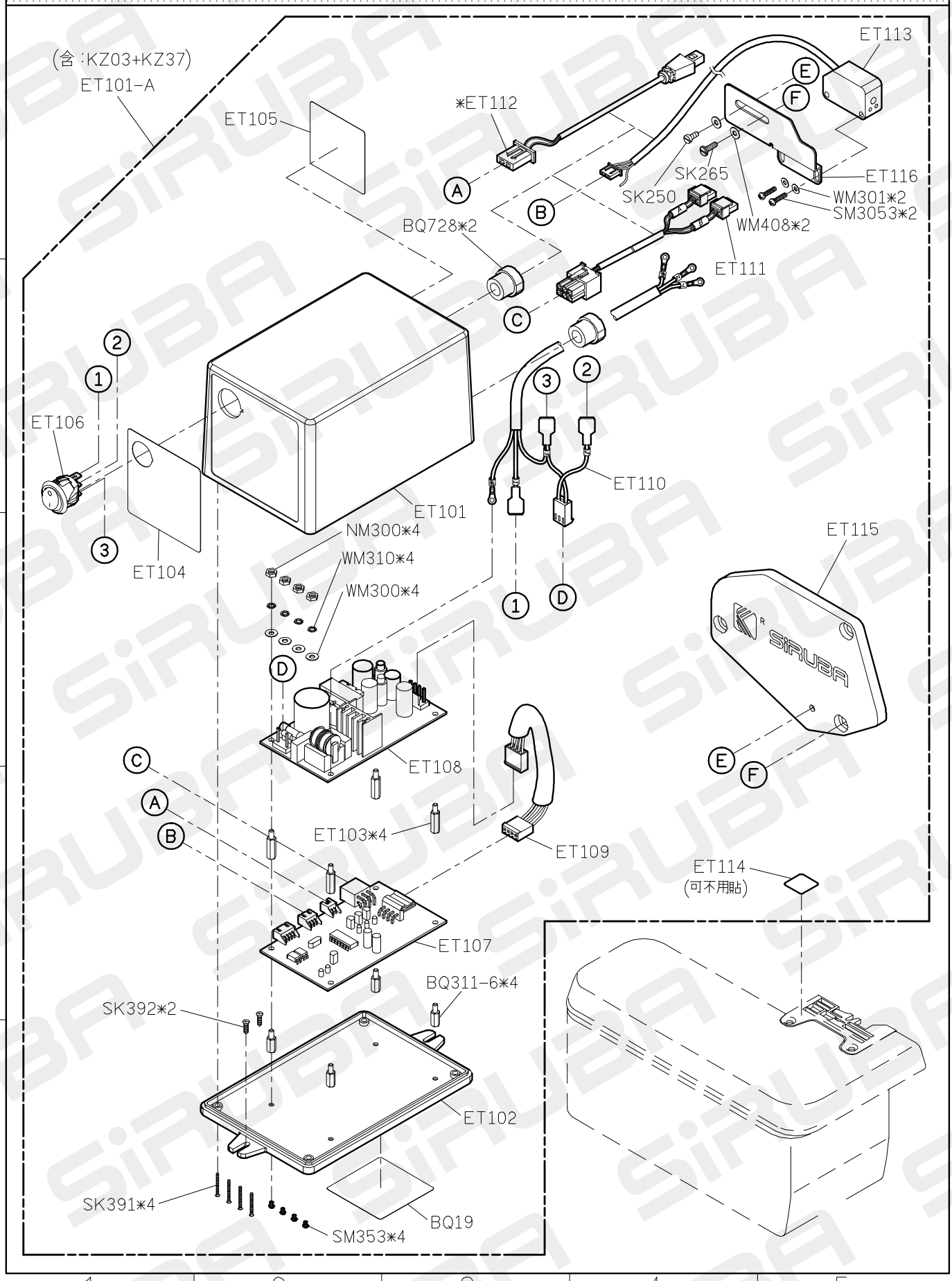

FOR 700K/700KD/988/988D
*USE FOR 700K/988

2010/07/12

700K PARTS LIST FOR ET−K GROUP 2/3

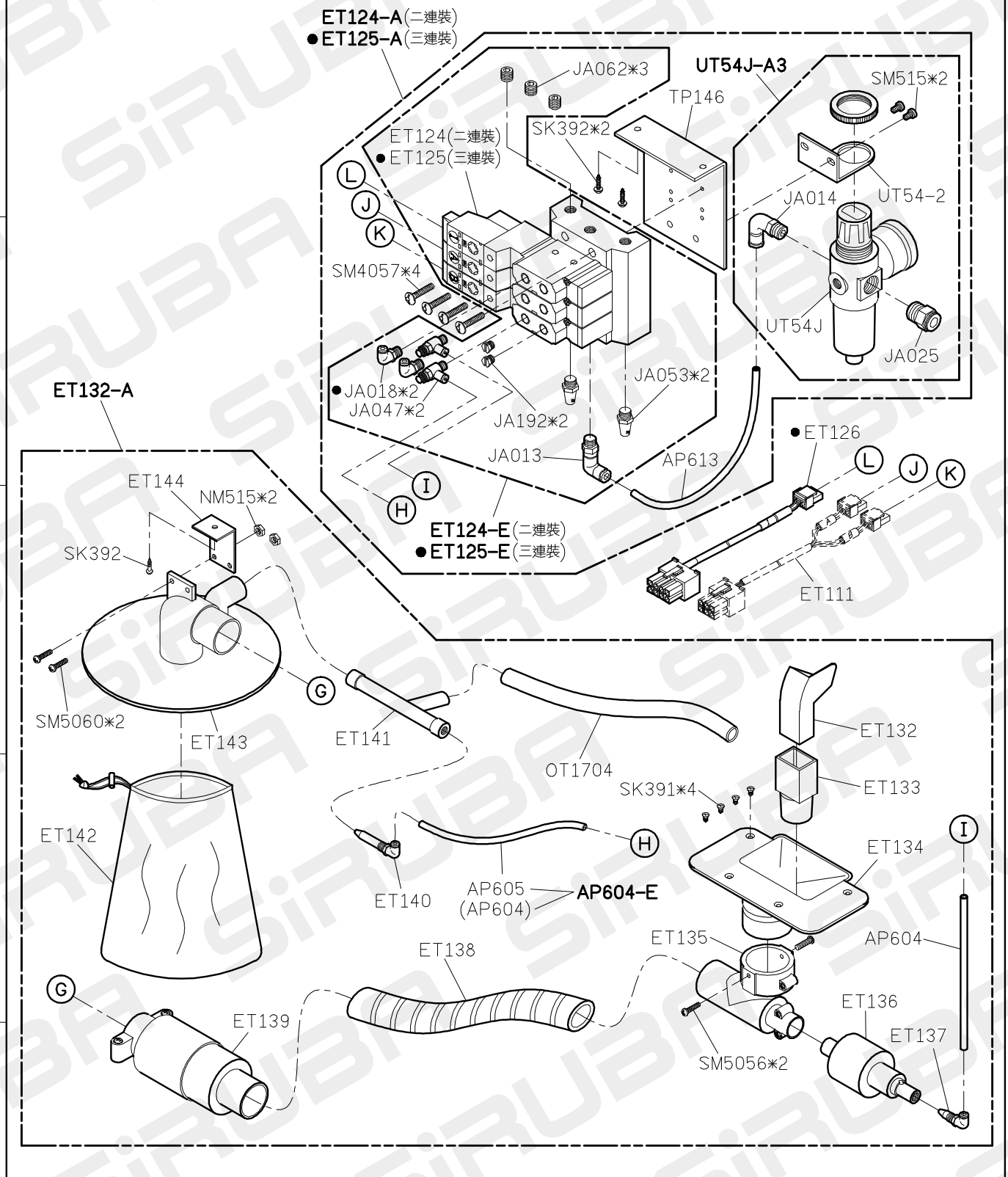

無自動台壓脚	有自動台壓脚
ET124	●ET125
	●ET126
	●JA018*2

700K PARTS LIST FOR ET−K GROUP 3/3

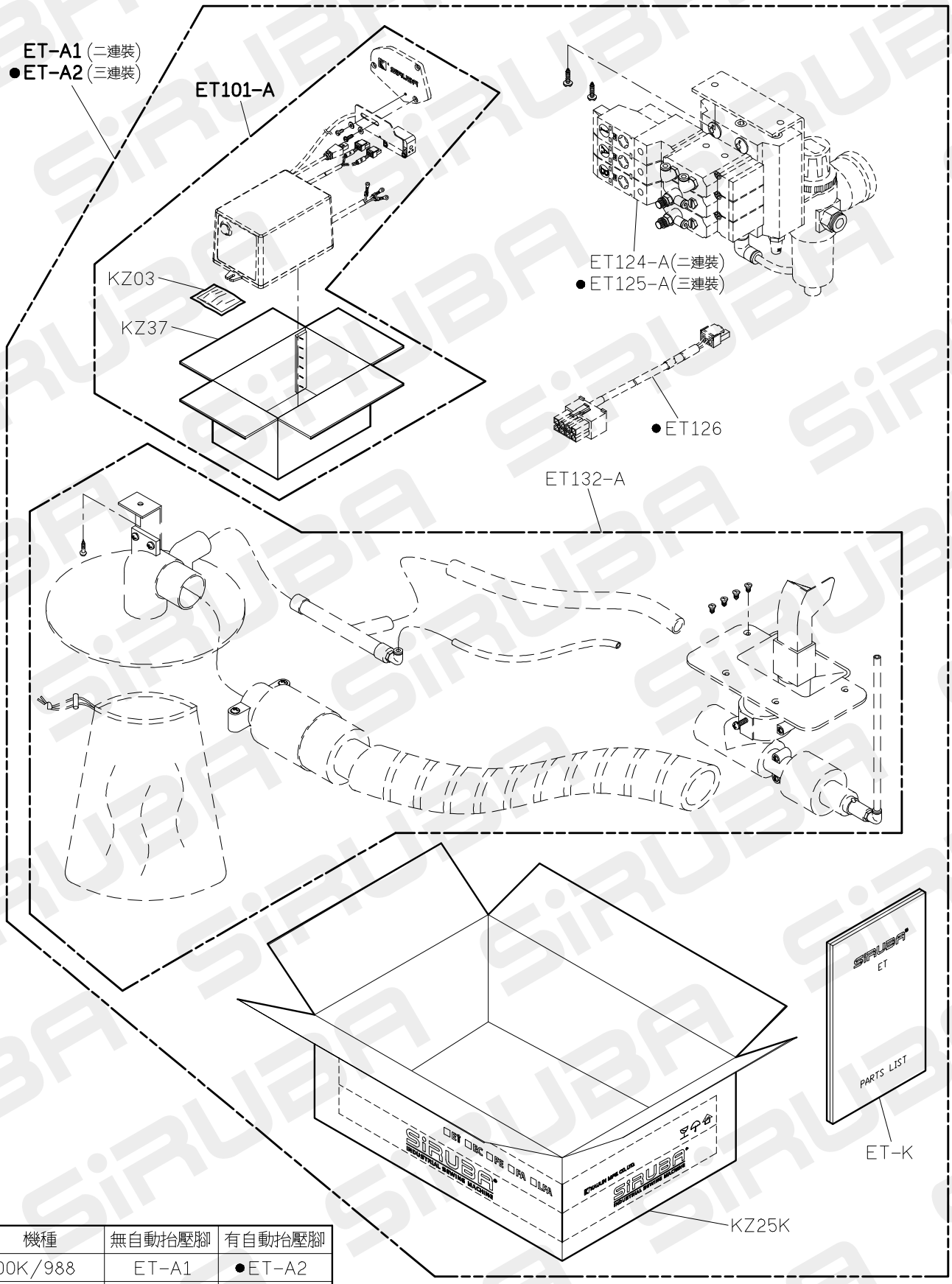

機種	無自動抬壓腳	有自動抬壓腳
700K/988	ET-A1	●ET-A2
700KD/988D	ET-A1	●ET-A2

FOR 700K/700KD/988/988D

2010/07/12

PARTS LIST FOR ET−K1 GROUP 1/2

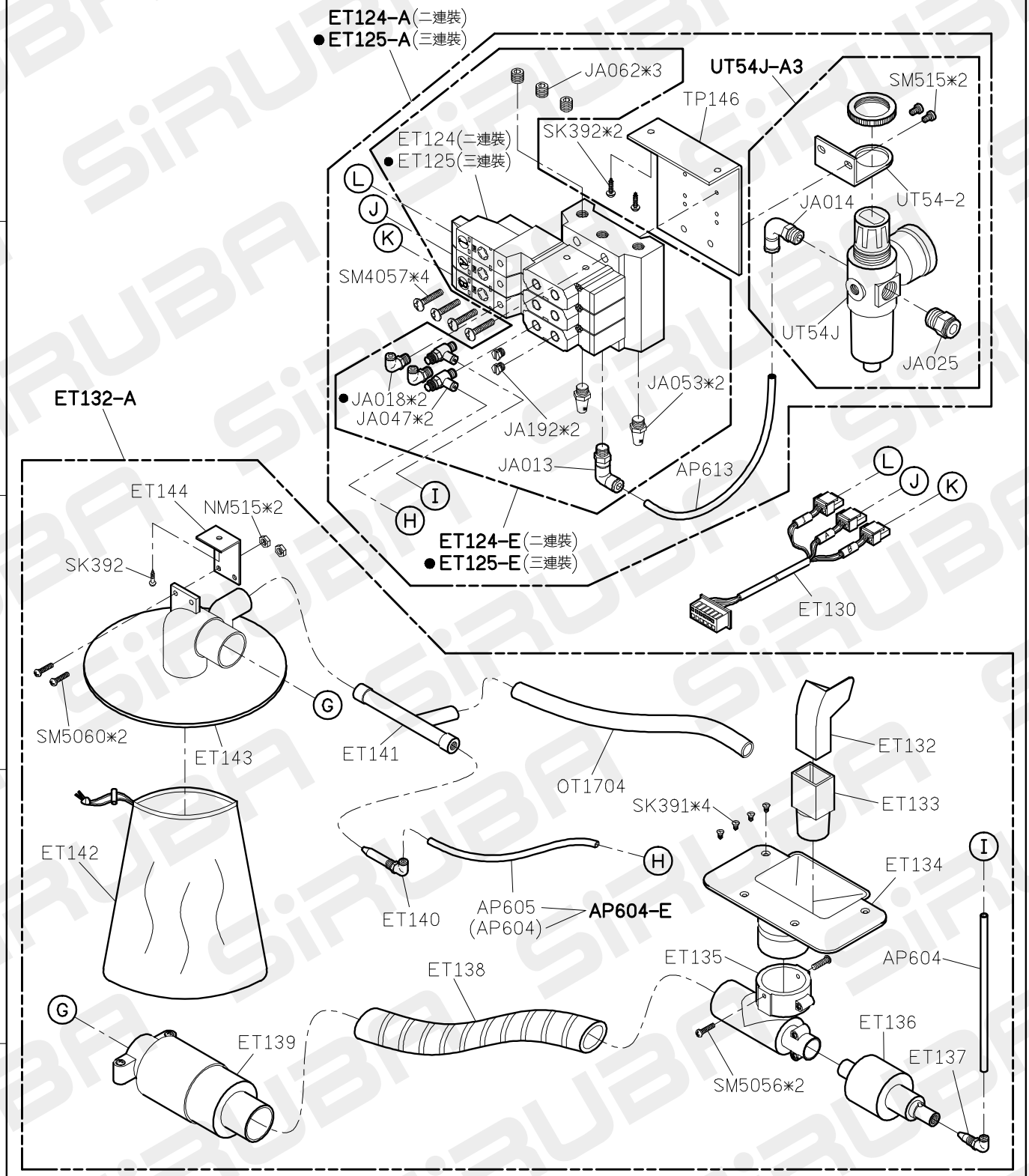

無自動抬壓脚	有自動抬壓脚
ET124	●ET125
	●JA018*2

FOR 700KD/988D ISM system

2010/07/12

*二連裝時ET130不需接Ⓛ

PARTS LIST FOR ET−K1 GROUP 2/2

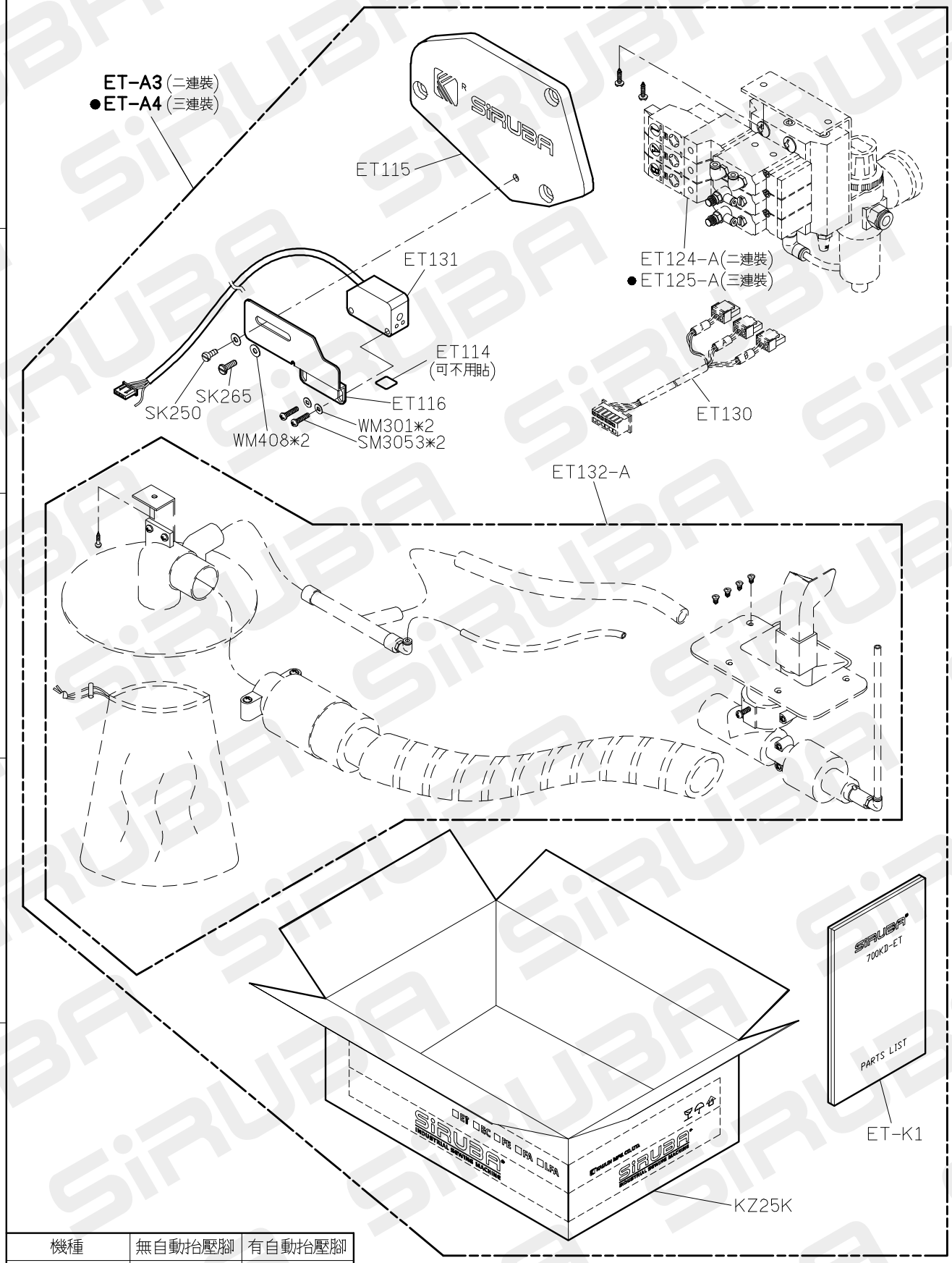

機種	無自動抬壓腳	有自動抬壓腳
700KD/988D	ET-A3	●ET-A4

FOR 700KD/988D ISM system

2010/07/12

700K PARTS LIST FOR FAK GROUP

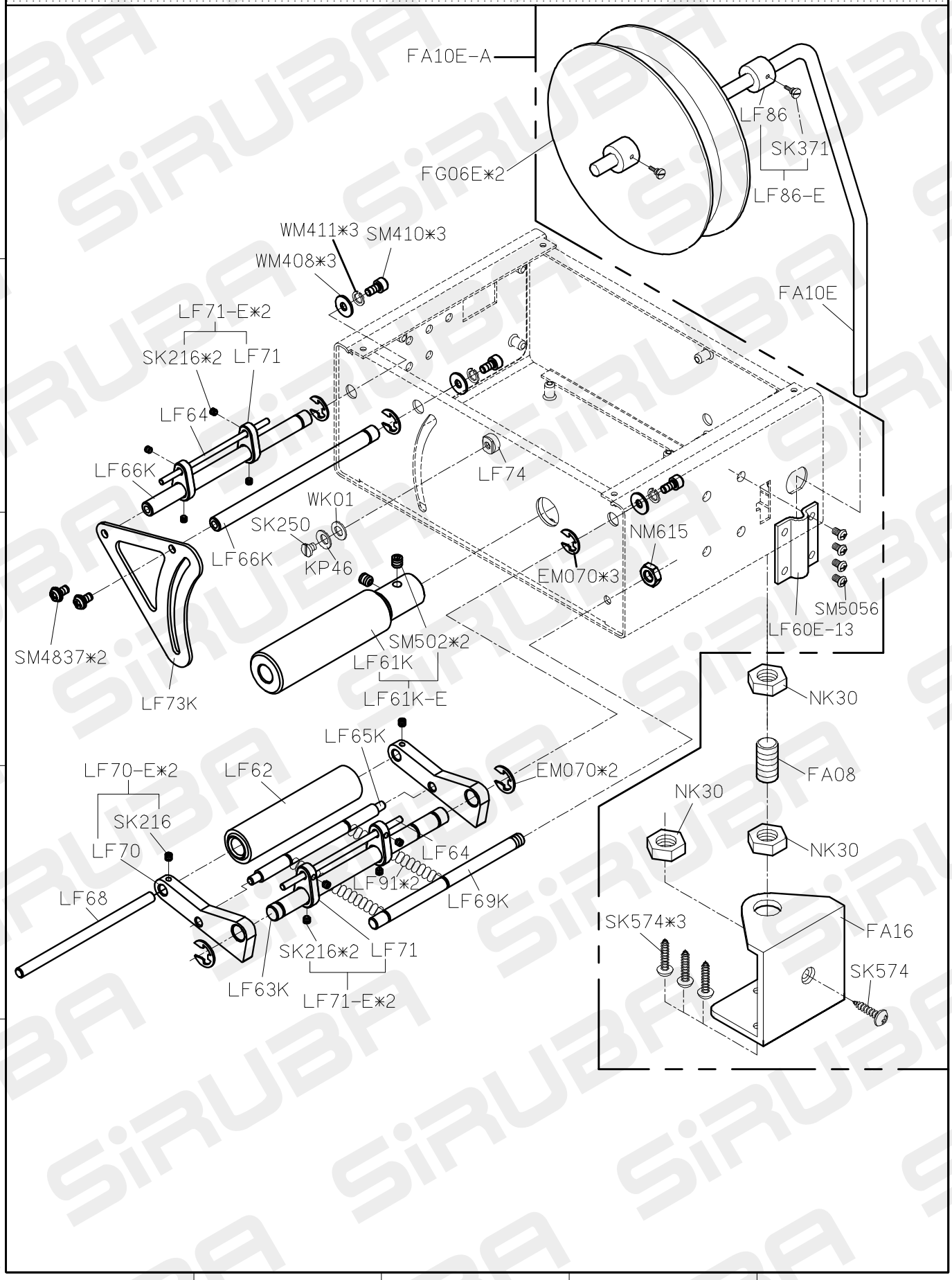

700K PARTS LIST FOR FAK GROUP P.2/2

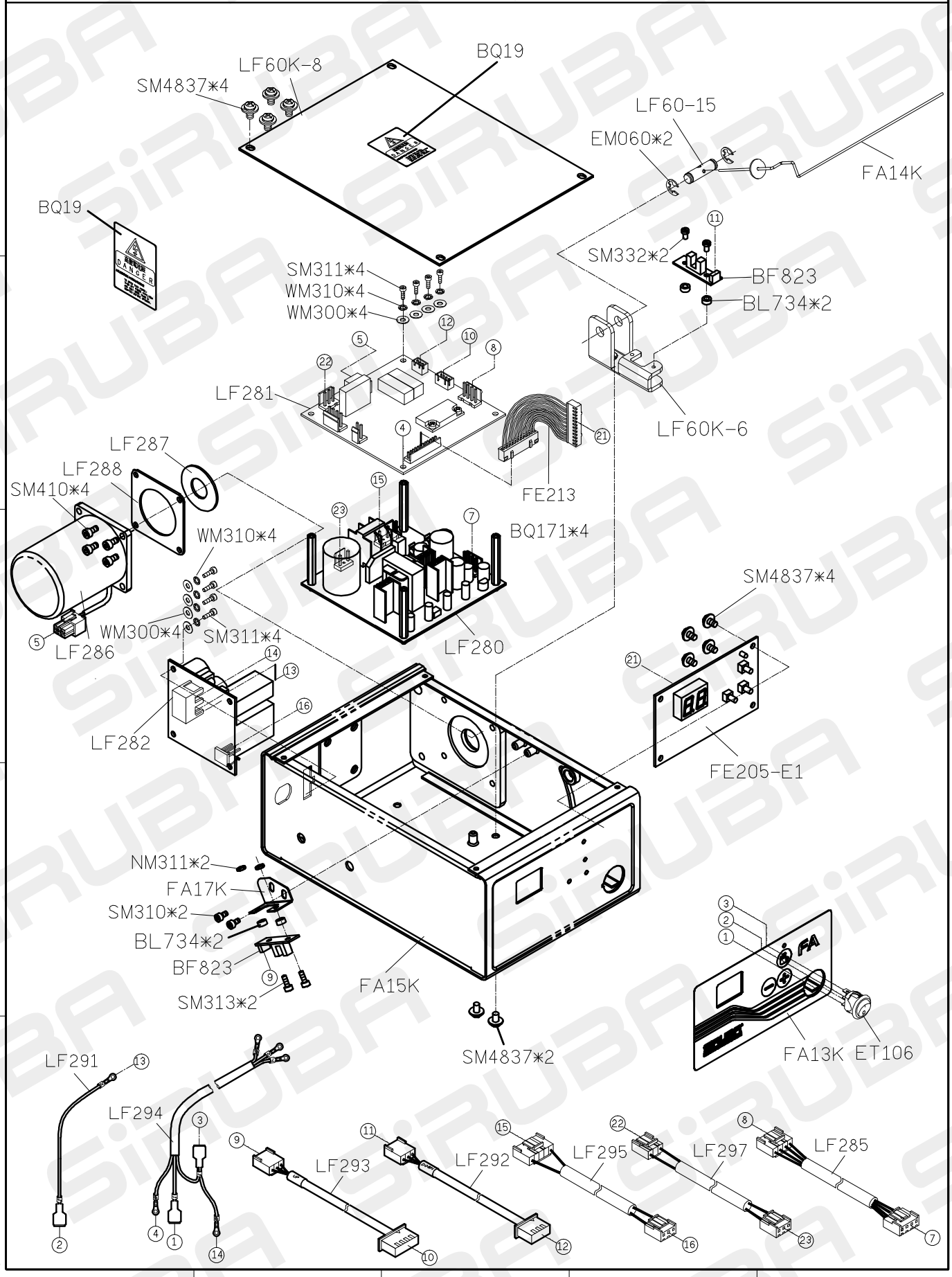

700K PARTS LIST FOR FLP GROUP P.1/1

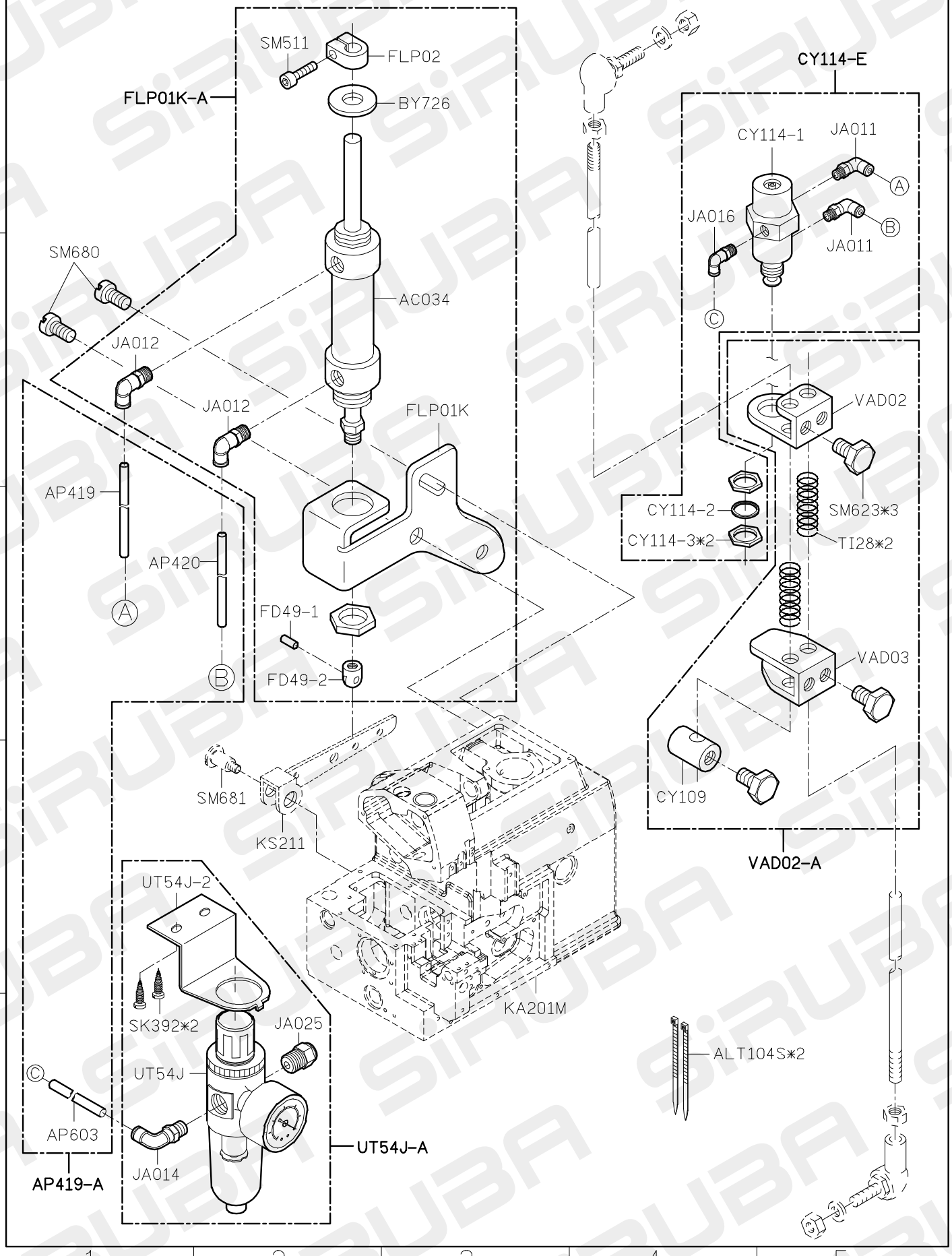

700K PARTS LIST FOR LFAK-A GROUP

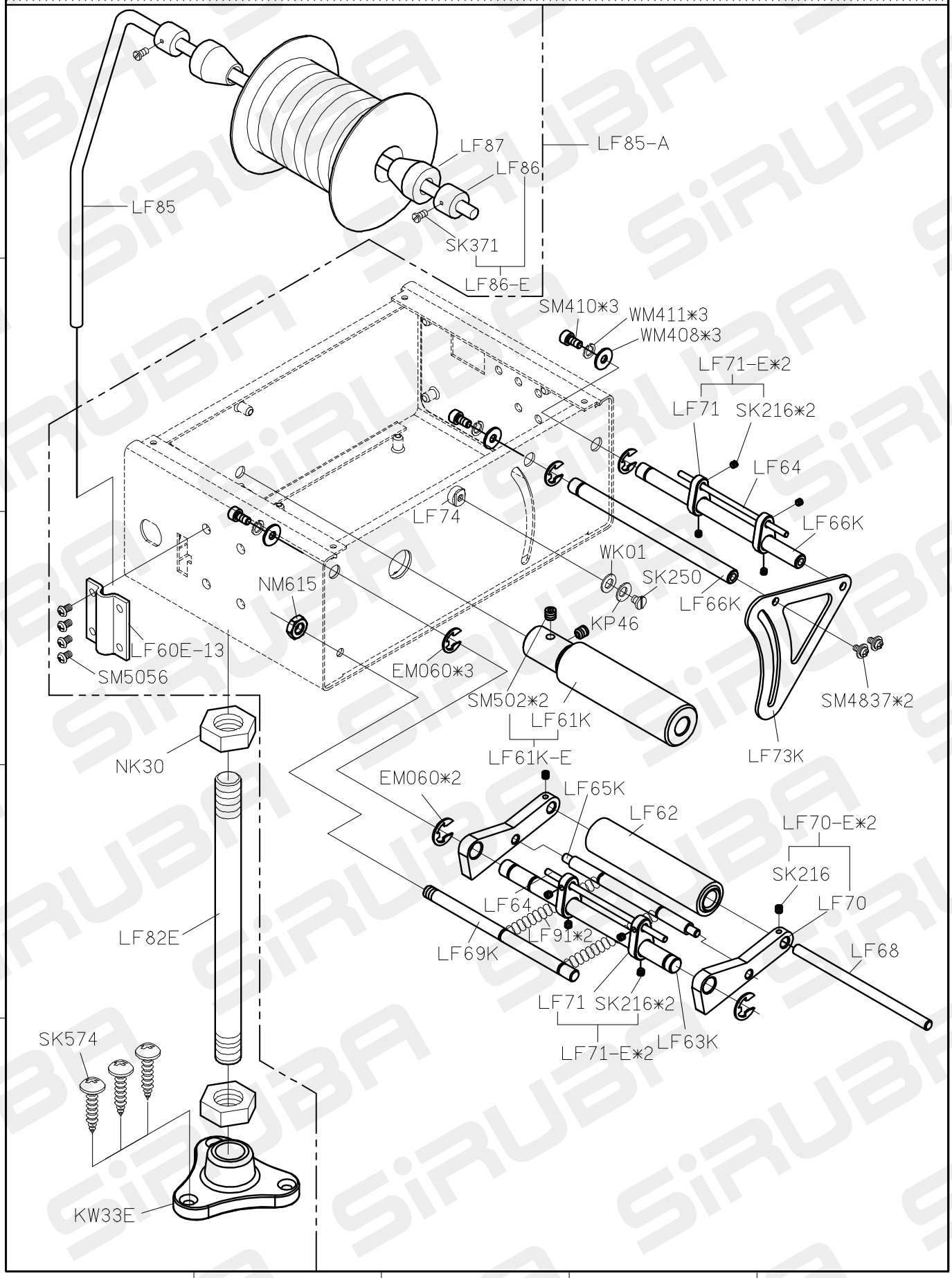

* FOR 700K/F007K

10/10/04

700K PARTS LIST FOR LFAK-A GROUP

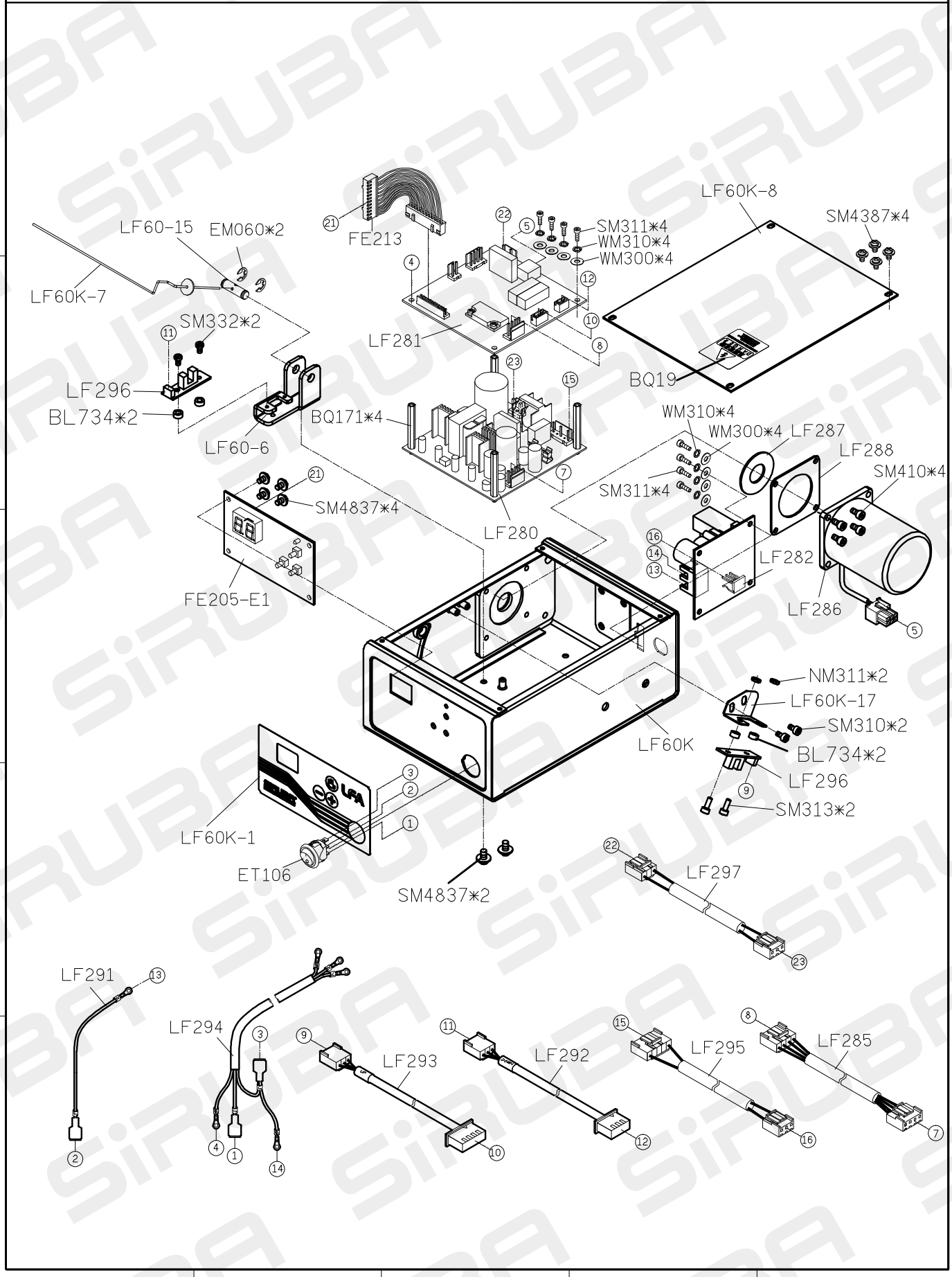

* FOR 700K/F007K

10/04/22

700K PARTS LIST FOR LFAK-A1 GROUP

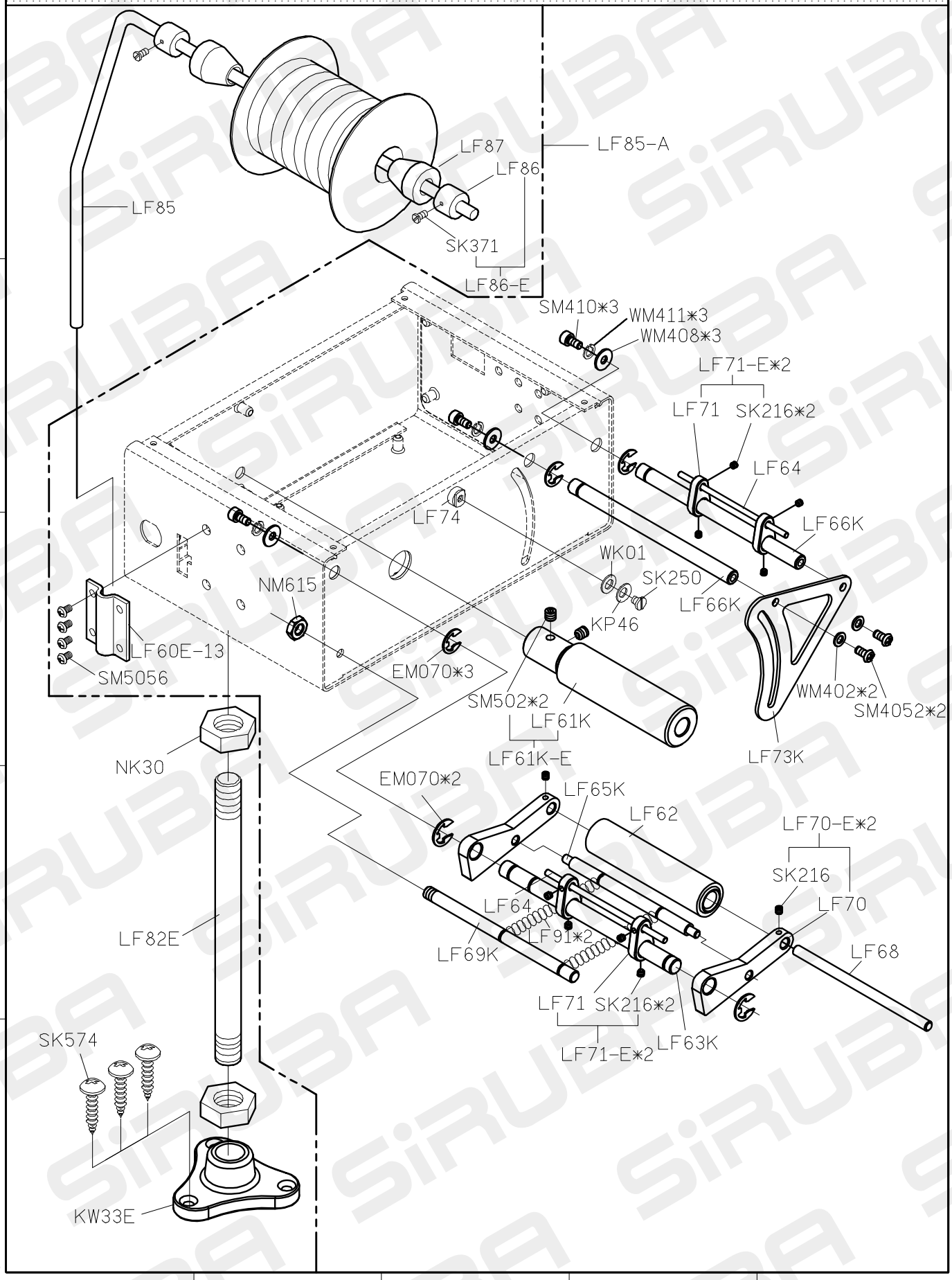

* FOR 700K/F007K

10/01/13

700K PARTS LIST FOR LFAK-A1 GROUP

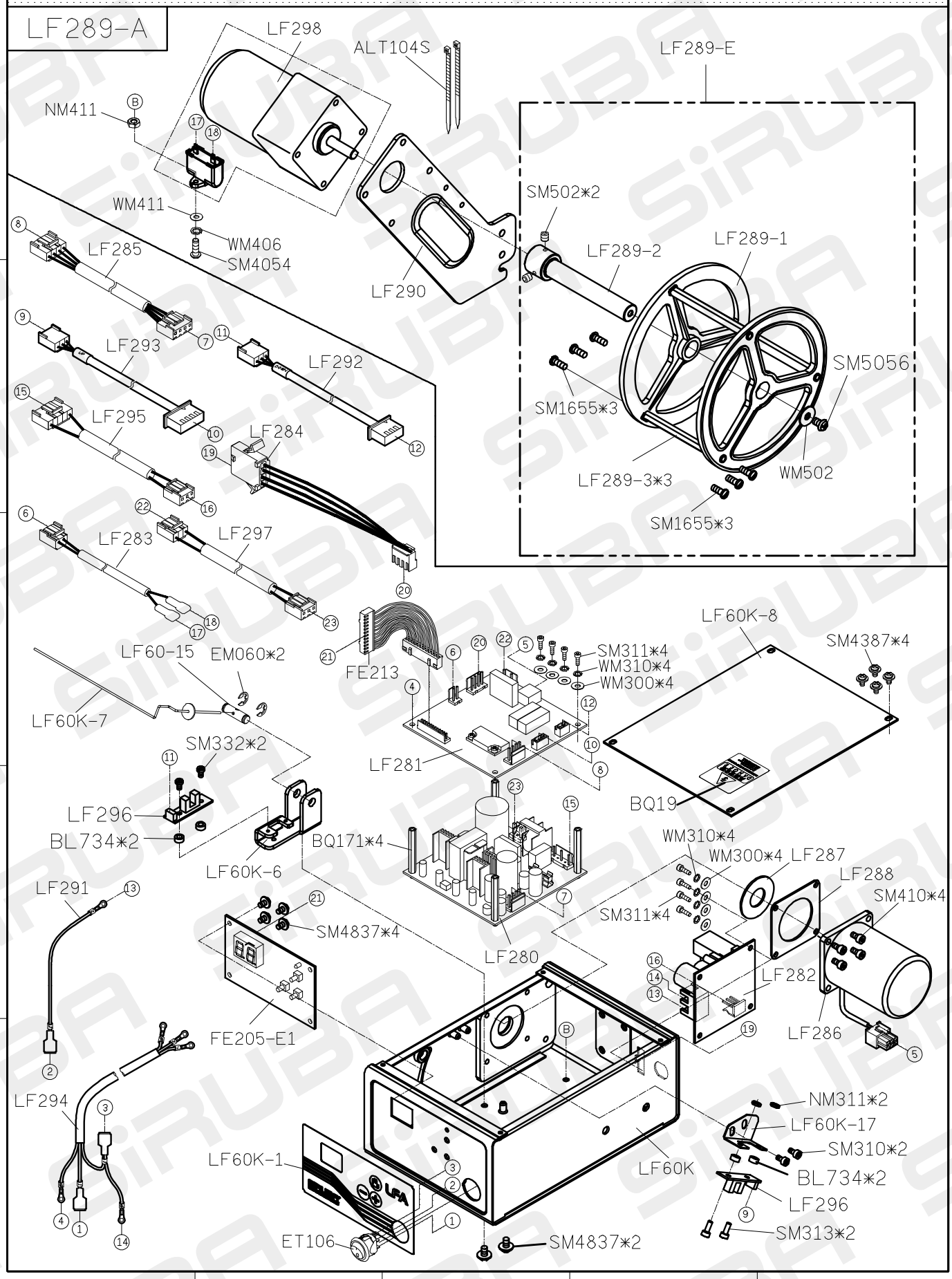

* FOR 700K/F007K

10/04/22

700K PARTS LIST FOR LFC-3 GROUP P.1/1

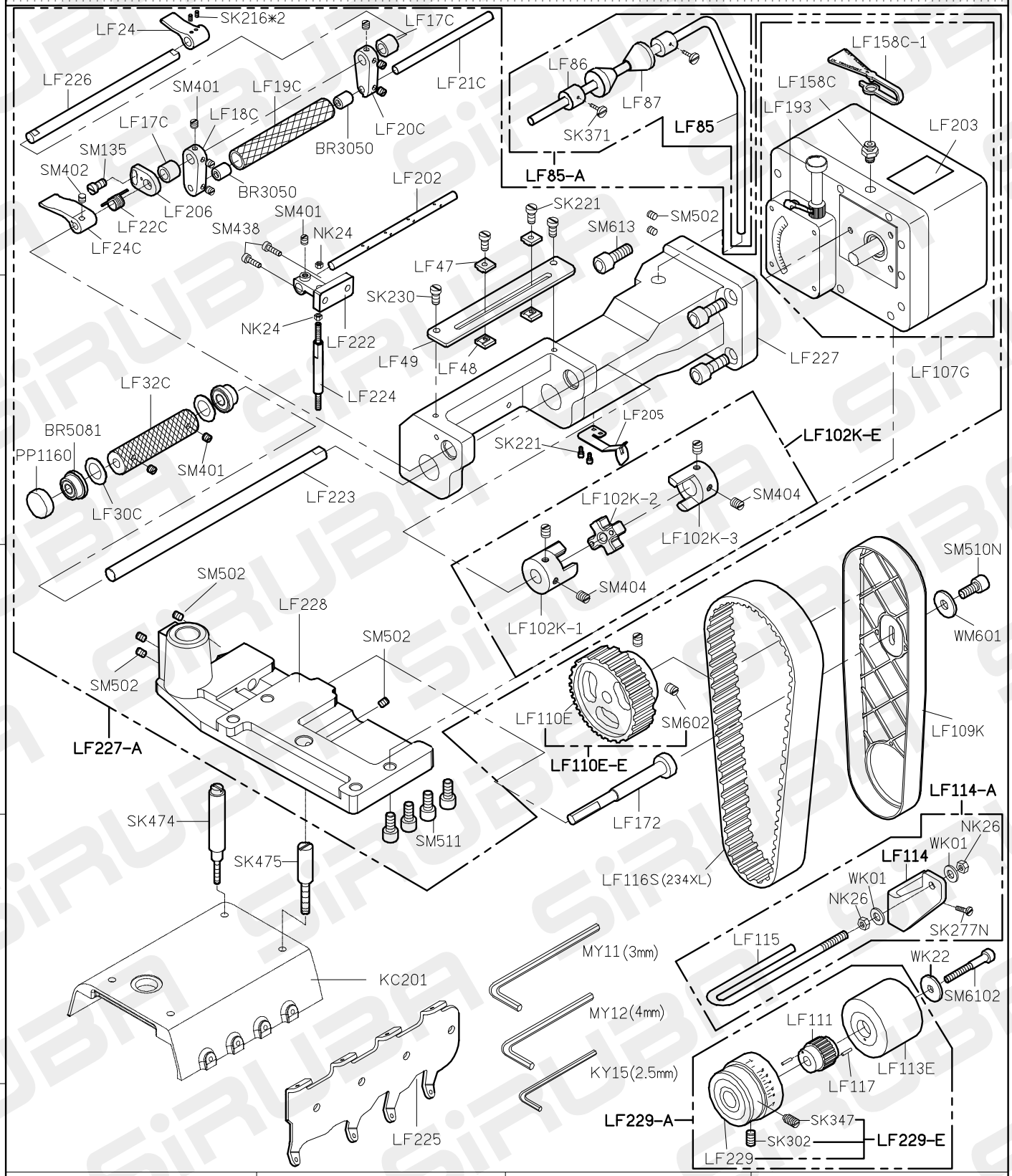

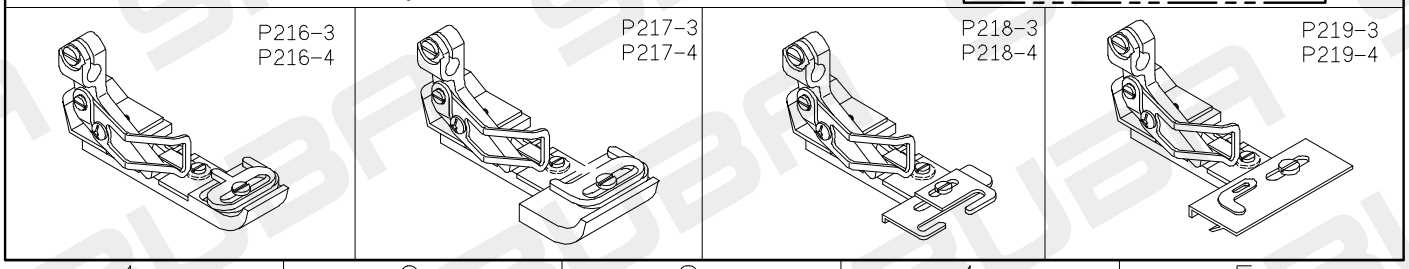

700K PARTS LIST FOR PS-K GROUP

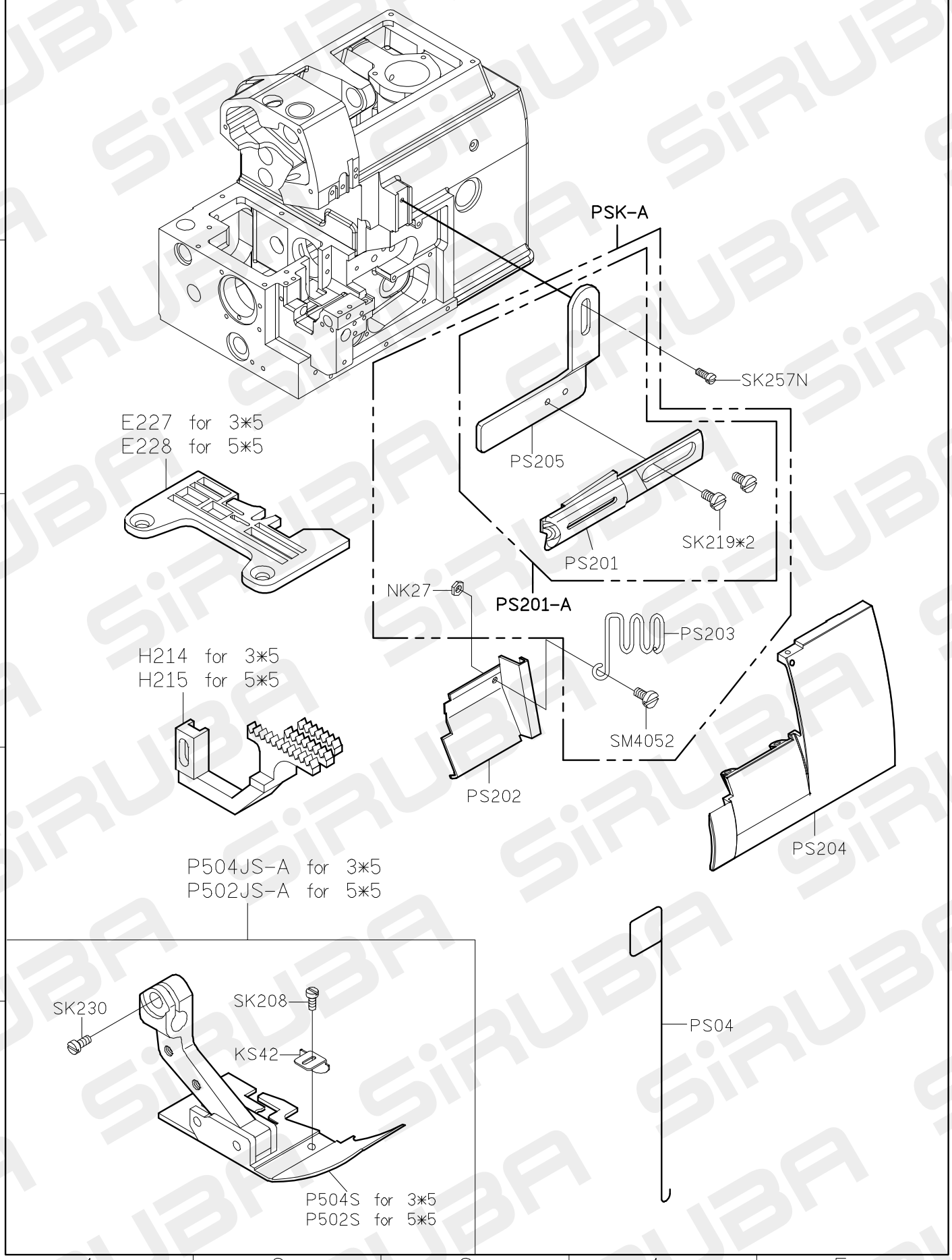

700K PARTS LIST FOR TA−K GROUP P.1/1

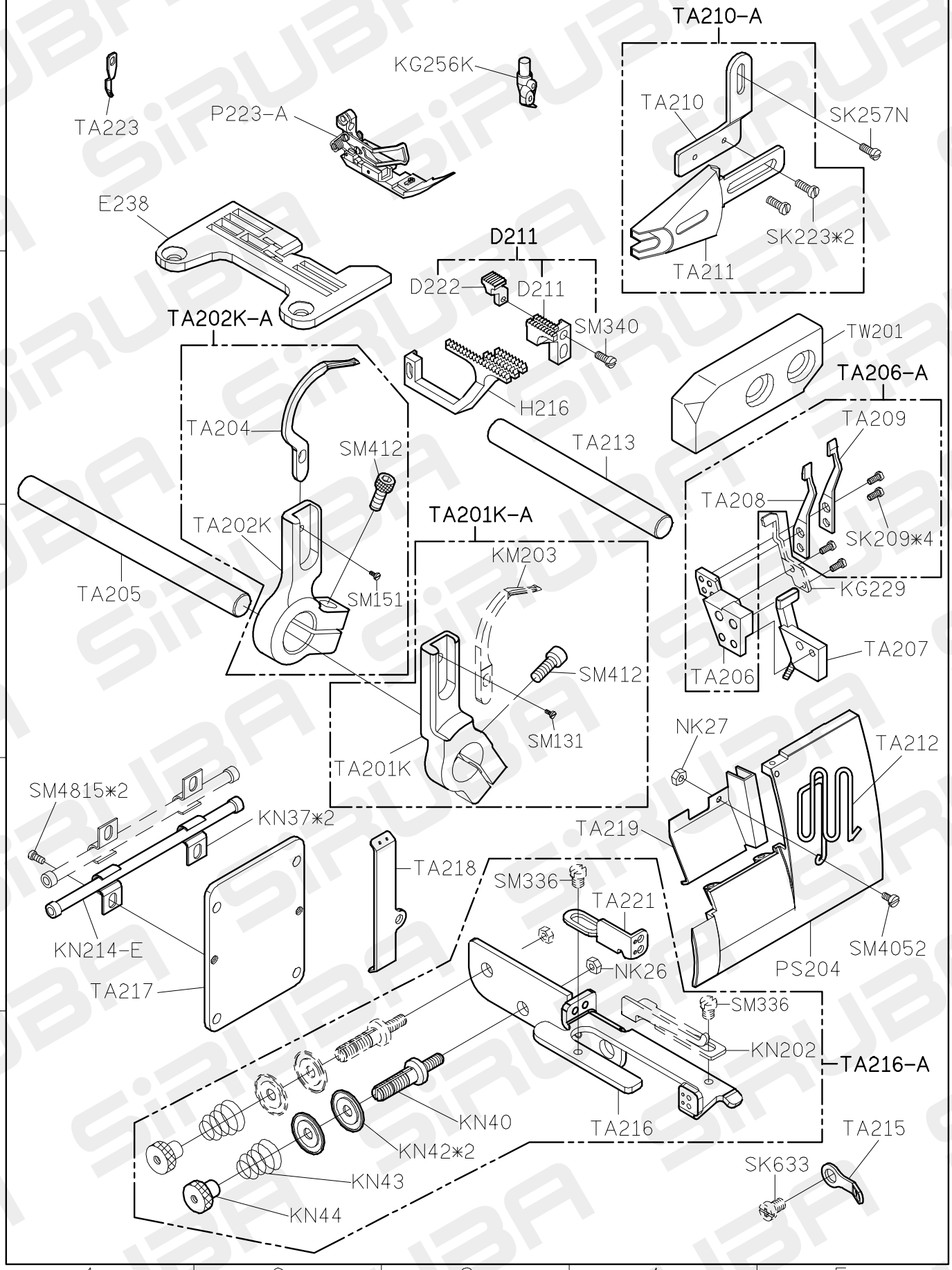

FOR 700K/700KD/988/988D

2010/08/20

700K PARTS LIST FOR TG GROUP

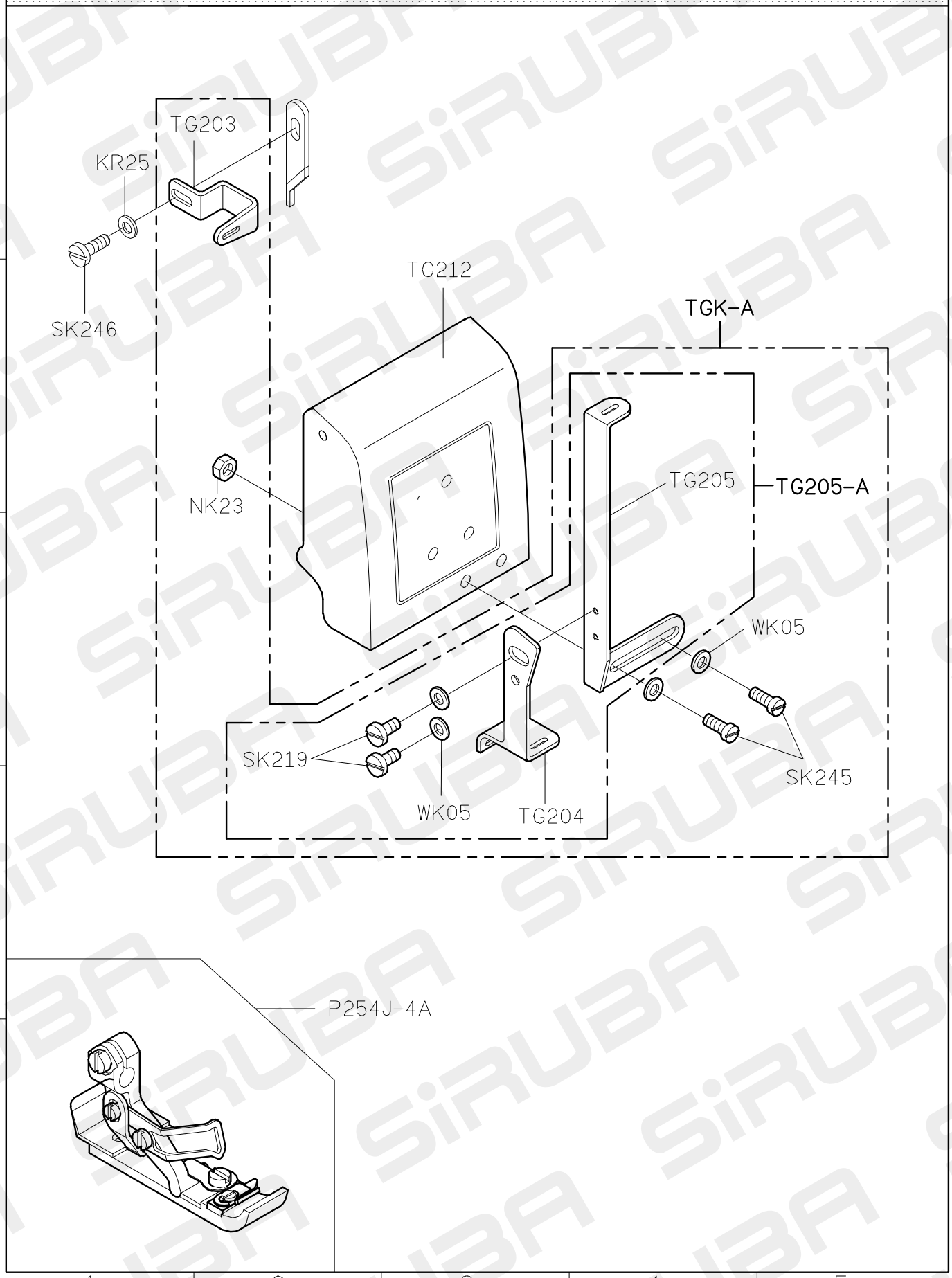

FOR 700K/700KD/988/988D

10/08/20

700K PARTS LIST FOR TR GROUP

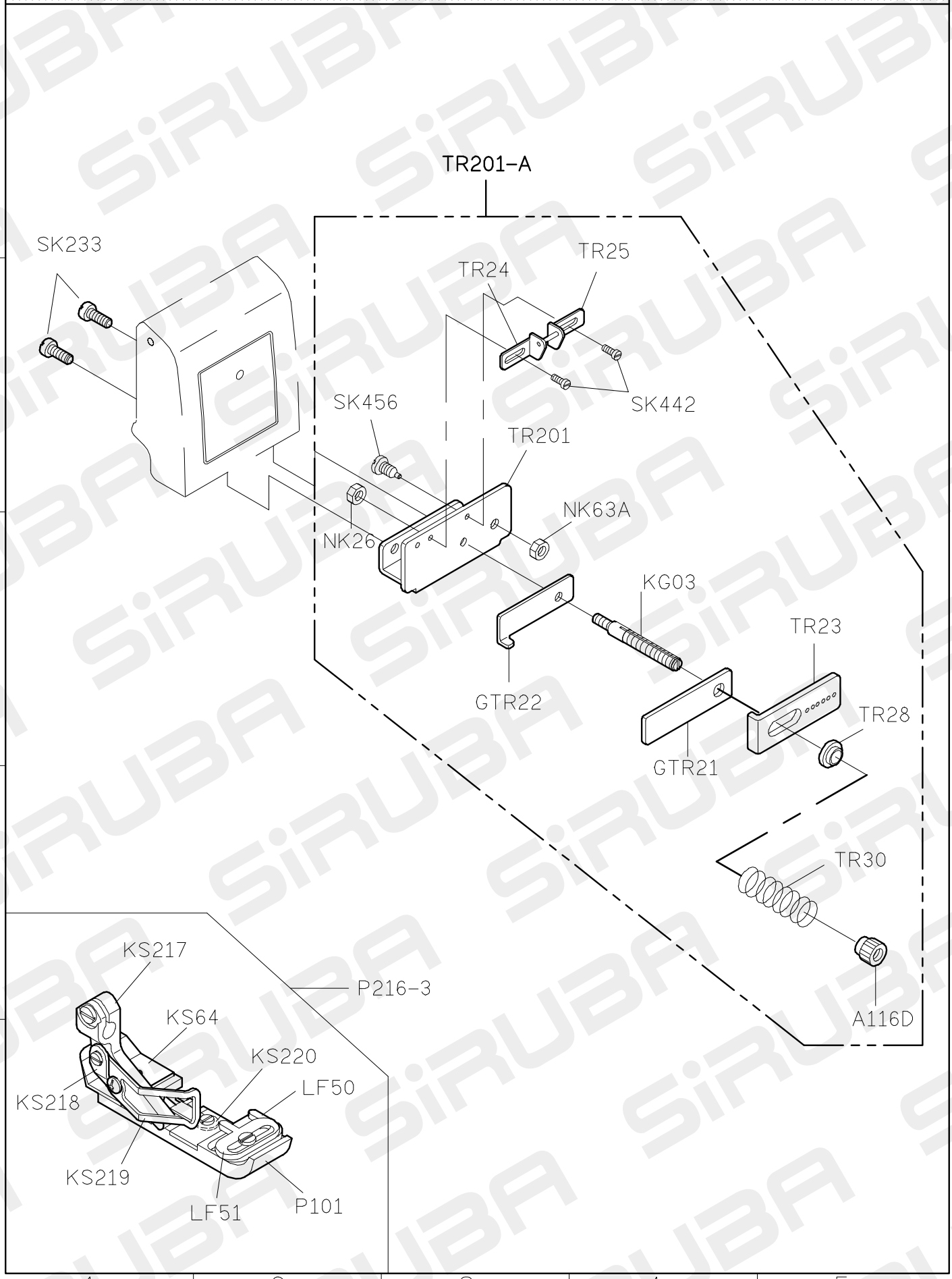

700K PARTS LIST FOR TW GROUP P.1/1

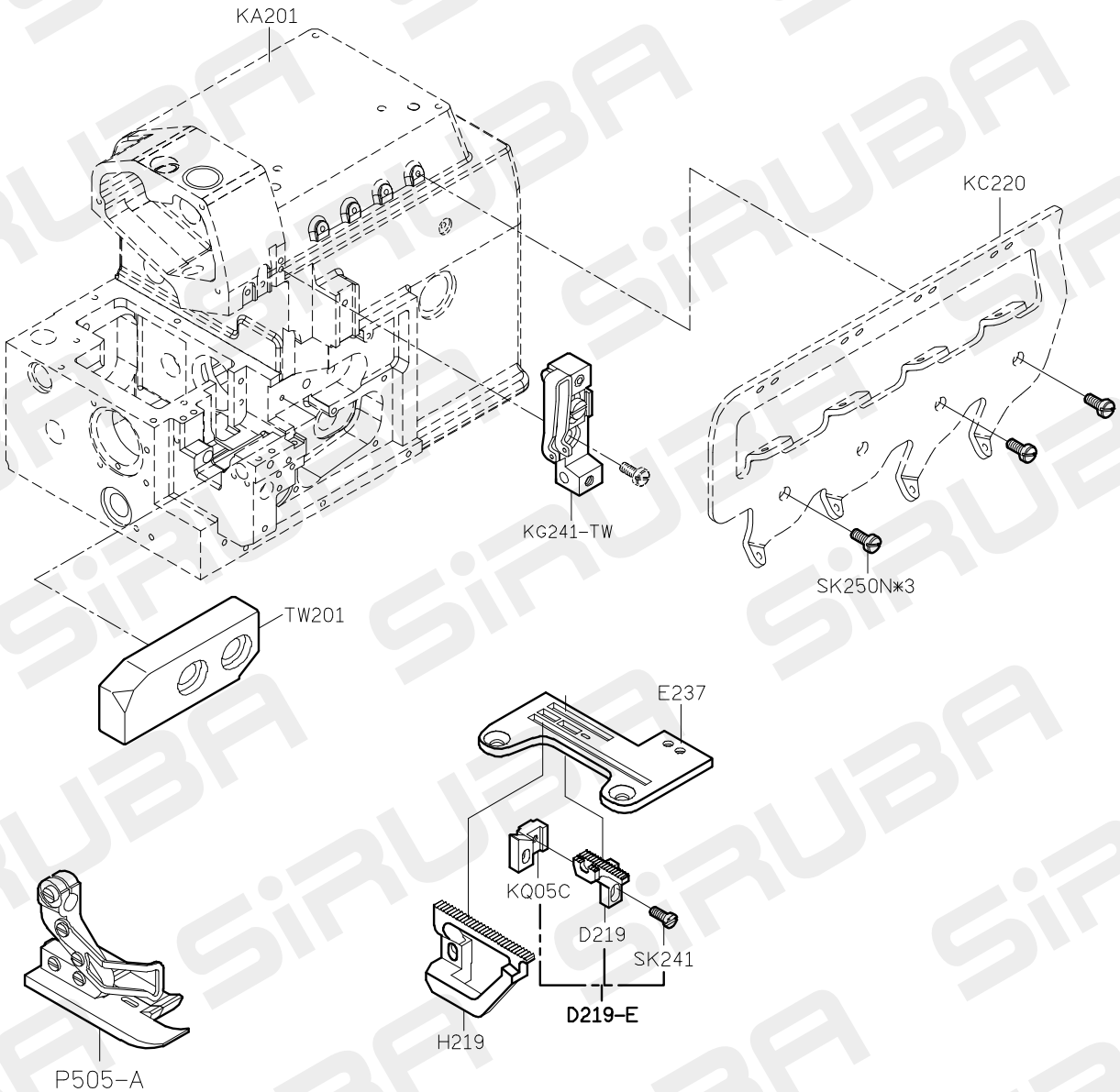

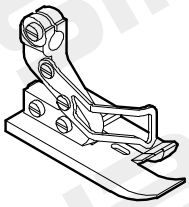

P506-A

● 客戶選購

PARTS NO	GAUGE
P506-2	5
P506-3	6

FOR 700K/700KD/988/988D

2010/08/20

700K PARTS LIST FOR VT GROUP

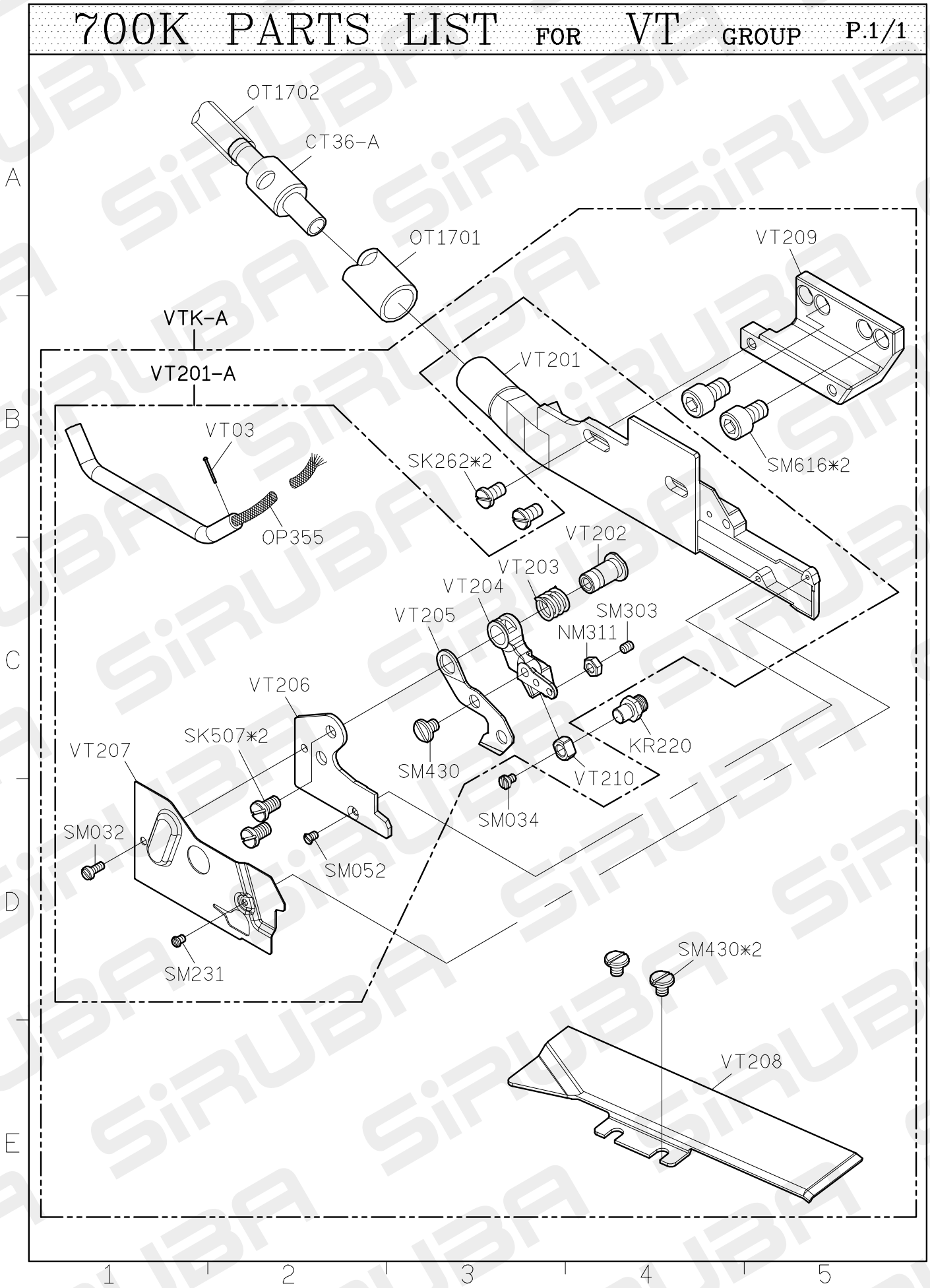
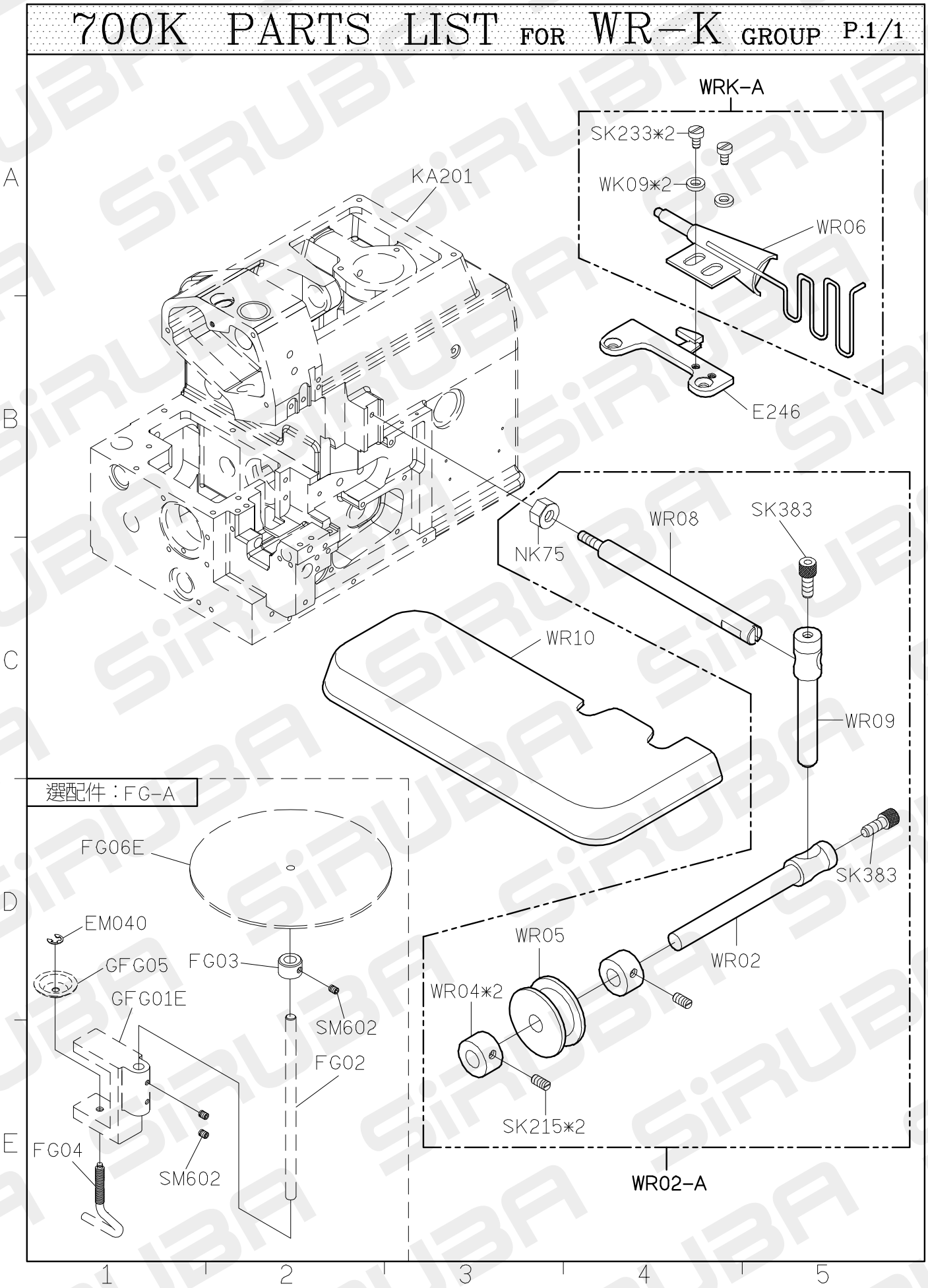
700K PARTS LIST FOR WR-K GROUP P.1/1