SiRUBA GAGE PARTS LIST	Series	Remark	Page	Date
	700K/ 988		1 / 2	2012/10/23

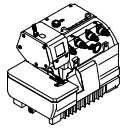
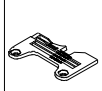
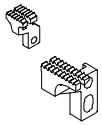
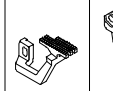

機型 MODEL		針板 NEEDLE PLATE	送具 FEED DOG		送具 FEED DOG	押具 PRESSER FOOT	勾針 LOOPER	針留 NEEDLE CLAMP	束子 COLLER	衝程 CRANK	衝程 CRANK	大心 Crankshaft	勾針連桿座 Upper Looper Holder	過線器 Bracket	下刀架 Lower Knife Holder	針號 NEEDLE
737K 988-3T	503M2-04	E222	D210	D207	H204	P201-14A	LP231	KG231K-E	KJ204	KF203-E	KJ206-E	KD201	KJ236	KJ219	KR209	DCX27#11
	504F1-04	E206	D201	D207	H201	P201-14A	LP225	KG231K-E	KJ204	KF203-E	KJ206-E	KD201	KJ236	KJ219	KR209	DCX27#9
	504F1-15	E233K	D201	D217	H201	P214P-A	LP225	KG231K-E	KJ204	KF203-E	KJ206-E	KD201	KJ236	KJ219	KR209	DCX27#9
	504F2-02/GAL	E233K	D201	D217	H201	P214P-2A	LP225	KG231K-E	KJ204	KF203-E	KJ206-E	KD201	KJ236	KJ219	KR209	DCX27#9
	504M1-15	E207	D201	D209	H201	P211-A	LP225	KG231K-E	KJ204	KF203-E	KJ206-E	KD201	KJ236	KJ219	KR209	DCX27#9
	504M2-04	E222	D210	D207	H204	P201-14A	LP225	KG231K-E	KJ204	KF203-E	KJ206-E	KD201	KJ236	KJ219	KR209	DCX27#11
	504M2-04LFC-3	E222	D210	D207	H204	P218-3	LP225	KG231K-E	KJ204	KF203-E	KJ206-E	KD201	KJ236	KJ219	KR209	DCX27#11
	504M2-04TR	E222	D210	D207	H204	P216-3	LP225	KG231K-E	KJ204	KF203-E	KJ206-E	KD201	KJ236	KJ219	KR209	DCX27#11
	WR/LFC-3	E246					LP225	KG231K-E	KJ204	KF203-E	KJ206-E	KD201	KJ236	KJ219		DCX27#11
	504M3-04	E220	D210	D209	H204	P201-14A	LP225	KG231K-E	KJ204	KF203-E	KJ206-E	KD201	KJ236	KJ219	KR209	DCX27#11
	504M3-05	E221	D210	D209	H204	P201-14A	LP225	KG231K-E	KJ204	KF203-E	KJ206-E	KD201	KJ236	KJ219	KR209	DCX27#11
	504M3-05PZ	E221	D210	D209	H204	P257-A	LP225	KG231K-E	KJ204	KF203-E	KJ206-E	KD201	KJ236	KJ219	KR209	DCX27#18
	504M5-04BK	E232	D203	D207	H203	P202-2A	LP225	KG231K-E	KJ204	KF203-E	KJ206-E	KD201	KJ236	KJ219	KR209	DCX27#11
	504M5-04BK-1	E232	D203	D207	H203	P202-2A	LP225	KG231K-E	KJ204	KF203-E	KJ206-E	KD201	KJ236	KJ219	BK239	DCX27#11
	505F1-04	E206	D201	D207	H201	P203-A	LP225	KG231K-E	KJ204	KF203-E	KJ206-E	KD201	KJ236	KJ219	KR209	DCX27#9
747K 988-4T	512M1-25	E208	D210	D207	H204	P201-A	LP228	KG242K-E	KJ204	KF215-E	KJ203-E	KD201	KJ208	KJ219	KR209	DCX27#11*2
	512M1-34	E236	D210	D207	H204	P214-A	LP228	KG254K-E	KJ204	KF215-E	KJ203-E	KD201	KJ208	KJ219	KR209	DCX27#14*2
	514F1-24	E212K	D210	D207	H204	P201-A	LP226	KG242K-E	KJ234K	KF203-E	KJ203-E	KD201	KJ208	KJ219	KR209	DCX27#11*2
	514H4-24GA	E229	D202	D207	H202	P204-A	LP226	KG242K-E	KJ234K	KF203-E	KJ203-E	KD201	KJ208	KJ219	KR209	DCX27#11*2
	514H4-24GA/P	E229	D202	D207	H202	P204P-A	LP226	KG242K-E	KJ234K	KF203-E	KJ203-E	KD201	KJ208	KJ219	KR209	DCX27#11*2
	514M2-24	E229	D210	D207	H204	P201-A	LP226	KG242K-E	KJ234K	KF203-E	KJ203-E	KD201	KJ208	KJ219	KR209	DCX27#11*2
	514M2-24TG	E229	D210	D207	H204	P254J-4A	LP226	KG242K-E	KJ234K	KF203-E	KJ203-E	KD201	KJ208	KJ219	KR209	DCX27#11*2
	514M2-24LFC-3	E229	D210	D207	H204	P218-4	LP226	KG242K-E	KJ234K	KF203-E	KJ203-E	KD201	KJ208	KJ219	KR209	DCX27#11*2
	514M2-25	E208	D210	D207	H204	P201-A	LP226	KG242K-E	KJ234K	KF203-E	KJ203-E	KD201	KJ208	KJ219	KR209	DCX27#11*2
	514M2-25TG	E208	D210	D207	H204	P254J-4A	LP226	KG242K-E	KJ234K	KF203-E	KJ203-E	KD201	KJ208	KJ219	KR209	DCX27#11*2
	514M2-25LFC-3	E208	D210	D207	H204	P218-4	LP226	KG242K-E	KJ234K	KF203-E	KJ203-E	KD201	KJ208	KJ219	KR209	DCX27#11*2
	514M2-28	E239	D210	D207	H204	P201-8A	LP227A	KG242K-E	KJ204K	KF203-E	KJ203-E	KD201A	KJ228	KJ238	KR209	DCX27#11*2
	514M4-23	E209	D210	D207	H204	P201-2A	LP226	KG242K-E	KJ234K	KF203-E	KJ203-E	KD201	KJ208	KJ219	KR209	DCX27#11*2
	514M5-23BK	E210	D203	D207	H203	P202-A	LP226	KG242K-E	KJ234K	KF203-E	KJ203-E	KD201	KJ208	KJ219	KR209	DCX27#11*2
	514M5-23BK-1	E210	D203	D207	H203	P202-A	LP226	KG242K-E	KJ234K	KF203-E	KJ203-E	KD201	KJ208	KJ219	BK239	DCX27#11*2

SiRUBA GAGE PARTS LIST	Series	Remark	Page	Date
	700K/ 988		2 / 2	2012/08/23

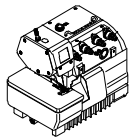
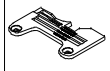
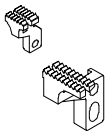

	機型 MODEL	針板 NEEDLE PLATE	送具 FEED DOG		送具 FEED DOG	押具 PRESSER FOOT	勾針 LOOPER	針留 NEEDLE CLAMP	束子 COLLER	衝程 CRANK	衝程 CRANK	大心 Crankshaft	勾針連桿座 Upper Looper Holder	過線器 Bracket	下刀架 Lower Knife Holder	針號 NEEDLE
747K 988-4T	514M5-24BK	E247	D203	D207	H203	P202-A	LP226	KG242K-E	KJ234K	KF203-E	KJ203-E	KD201	KJ208	KJ219	KR209	DCX27#11*2
	514M5-24BK-1	E247	D203	D207	H203	P202-A	LP226	KG242K-E	KJ234K	KF203-E	KJ203-E	KD201	KJ208	KJ219	KR209	DCX27#11*2
	514M7-24	E226	D212	D207	H210	P201-A	LP230	KG242K-E	KJ204K	KF203-E	KJ203-E	KD201A	KJ228	KJ238	KR209	DCX27#16*2
	514M7-24BK	E247	D203	D207	H203	P202-A	LP230	KG242K-E	KJ204K	KF203-E	KJ203-E	KD201A	KJ228	KJ238	KR209	DCX27#16*2
	514M7-24BK-1	E247	D203	D207	H203	P202-A	LP230	KG242K-E	KJ204K	KF203-E	KJ203-E	KD201A	KJ228	KJ238	BK239	DCX27#16*2
	514M7-24TG	E226	D212	D207	H210	P254J-4A	LP230	KG242K-E	KJ204K	KF203-E	KJ203-E	KD201A	KJ228	KJ238	KR209	DCX27#16*2
	514M7-25	E225	D212	D207	H210	P201-A	LP230	KG242K-E	KJ204K	KF203-E	KJ203-E	KD201A	KJ228	KJ238	KR209	DCX27#16*2
	514M7-25BK	E248	D203	D207	H203	P202-A	LP230	KG242K-E	KJ204K	KF203-E	KJ203-E	KD201A	KJ228	KJ238	KR209	DCX27#16*2
	514M7-25BK-1	E248	D203	D207	H203	P202-A	LP230	KG242K-E	KJ204K	KF203-E	KJ203-E	KD201A	KJ228	KJ238	BK239	DCX27#16*2
	514M7-25TG	E225	D212	D207	H210	P254J-4A	LP230	KG242K-E	KJ204K	KF203-E	KJ203-E	KD201A	KJ228	KJ238	KR209	DCX27#16*2
757K 988-5T	401M1/TW	E237	D219		H219	P506-A		KG253K-E	KJ204	KF203-E	KJ206-E	KD201	TW201			DCX27#14*1
	516H4-35GA	E213	D204	D207	H205	P508J-A	LP226	KG253K-E	KJ204	KF203-E	KJ206-E	KD201	KJ236	KJ219	KR219	DCX27#14*2
	516H4-35GA/P	E213	D204	D207	H205	P508JP-A	LP226	KG253K-E	KJ204	KF203-E	KJ206-E	KD201	KJ236	KJ219	KR219	DCX27#14*2
	516H4-55GA	E214	D205	D207	H206	P509J-A	LP226	KG255K-E	KJ204	KF203-E	KJ206-E	KD201	KJ236	KJ219	KR219	DCX27#14*2
	516H4-55GA/P	E214	D205	D207	H206	P509JP-A	LP226	KG255K-E	KJ204	KF203-E	KJ206-E	KD201	KJ236	KJ219	KR219	DCX27#14*2
	516L1-24	E215	D206	D207	H207	P500J-A	LP225	KG252K-E	KJ204	KF203-E	KJ206-E	KD201	KJ236	KJ219	KR219	DCX27#14*2
	516L1-35	E216	D206	D207	H212	P504J-A	LP225	KG253K-E	KJ204	KF203-E	KJ206-E	KD201	KJ236	KJ219	KR219	DCX27#14*2
	516M2-35	E217	D208	D207	H208	P504J-A	LP226	KG253K-E	KJ204	KF203-E	KJ206-E	KD201	KJ236	KJ219	KR219	DCX27#14*2
	516M2-35PS	E227	D208	D207	H214	P504JS-A	LP226	KG253K-E	KJ204	KF203-E	KJ206-E	KD201	KJ236	KJ219	KR219	DCX27#14*2
	516M2-55	E218	D208	D207	H209	P502J-A	LP226	KG255K-E	KJ204	KF203-E	KJ206-E	KD201	KJ236	KJ219	KR219	DCX27#14*2
	516M2-55PS	E228	D208	D207	H215	P502JS-A	LP226	KG255K-E	KJ204	KF203-E	KJ206-E	KD201	KJ236	KJ219	KR219	DCX27#14*2
	516X2-56	E234	D216A	D207	H220A	P962-A	LP230	KG255K-E	KJ234K+KJ234	KF203-E	KJ206-E	KD201A	KJ236	KJ238	KR223	DCX27#18*2
	401M2-50TA	E238	D211	D222	H216	P223-A		KG256K-E	KJ204	KF203-E	KJ206-E	KD201	TW201		KR219	DCX27#14*2
767K 988-6T	516M2-324	E219	D208	D207	H209	P233J-A	LP226	KG433K-E	KJ234K	KF203-E	KJ203-E	KD201	KJ208	KJ219	KR219	DCX27#11*3
	516M2-524	E224	D208	D207	H209	P255J-A	LP226	KG455K-E	KJ234K	KF203-E	KJ203-E	KD201	KJ208	KJ219	KR219	DCX27#11*3

SIRUBA PARTS LIST	Series	Parts Group	Subclass / Remark	Page
	700K/700KD 988/988D	BK-1K		1/1
				Date
				2012/12/18

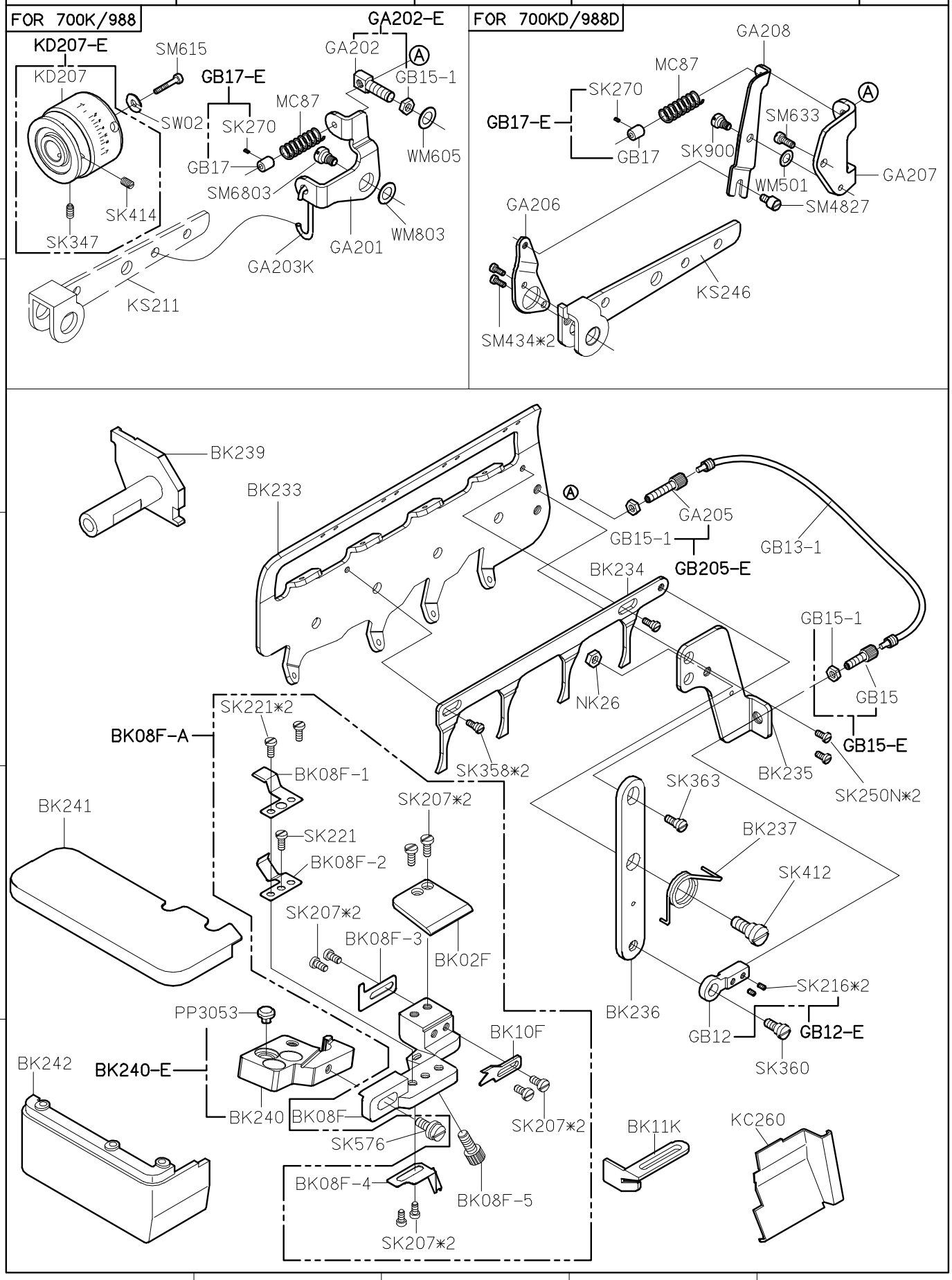

SIRUBA PARTS LIST	Series	Parts Group	Subclass / Remark	Page
	700K/700KD 988/988D	BK-K		1/1
				Date
				2012/12/18

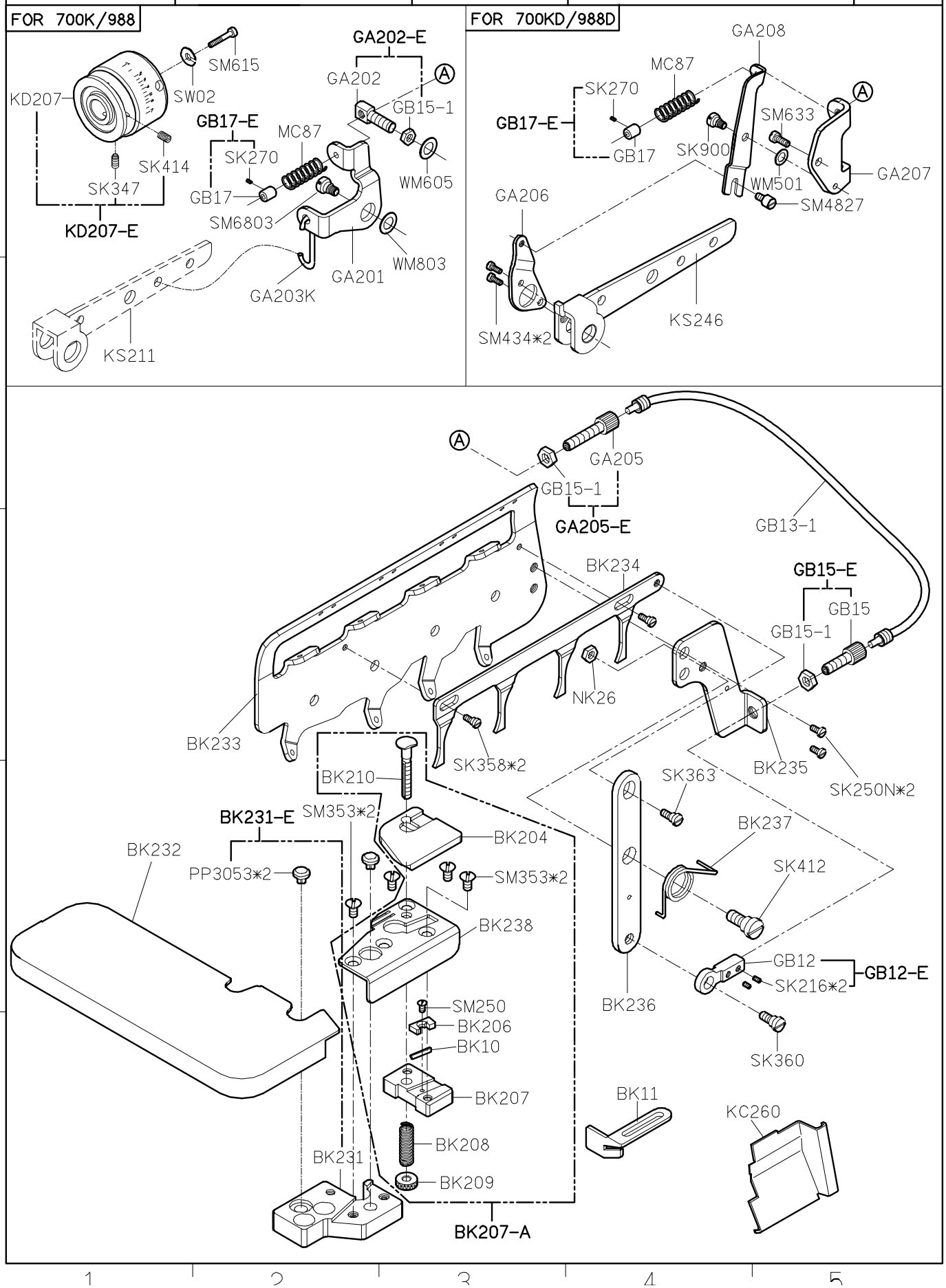

SIRUBA PARTS LIST	Series	Parts Group	Subclass / Remark	Page
	700K/700KD 988/988D	CT-K		1/1
				Date
				2012/12/18

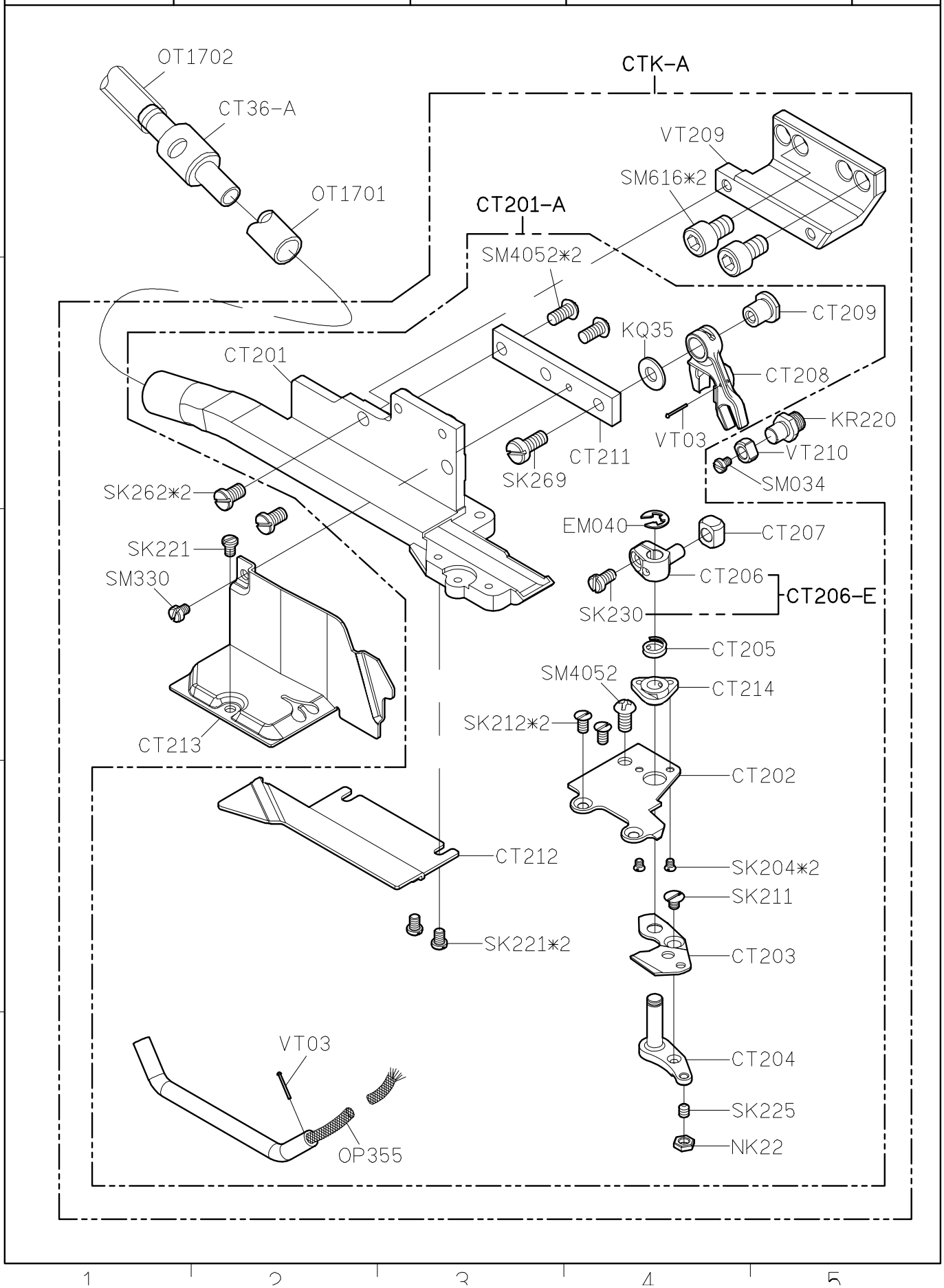

SIRUBA PARTS LIST	Series	Parts Group	Subclass / Remark	Page
	700K/700KD 988/988D	EC-K	EC-K for Short Knife EC-K-A for Long Knife #:Use for 700KD/988D ●:Use for Long Knife	1/4
				Date
				2012/12/13

Option : • Long Knife

•EC208(For Long Knife)

Long knife cut limit	22mm
Short knife cut limit	16mm

MODEL	EC	EC+BK	EC+GA
PARTS NO	EC202	EC215	EC215
		EC216	EC216
	SK290	SK612	SK612

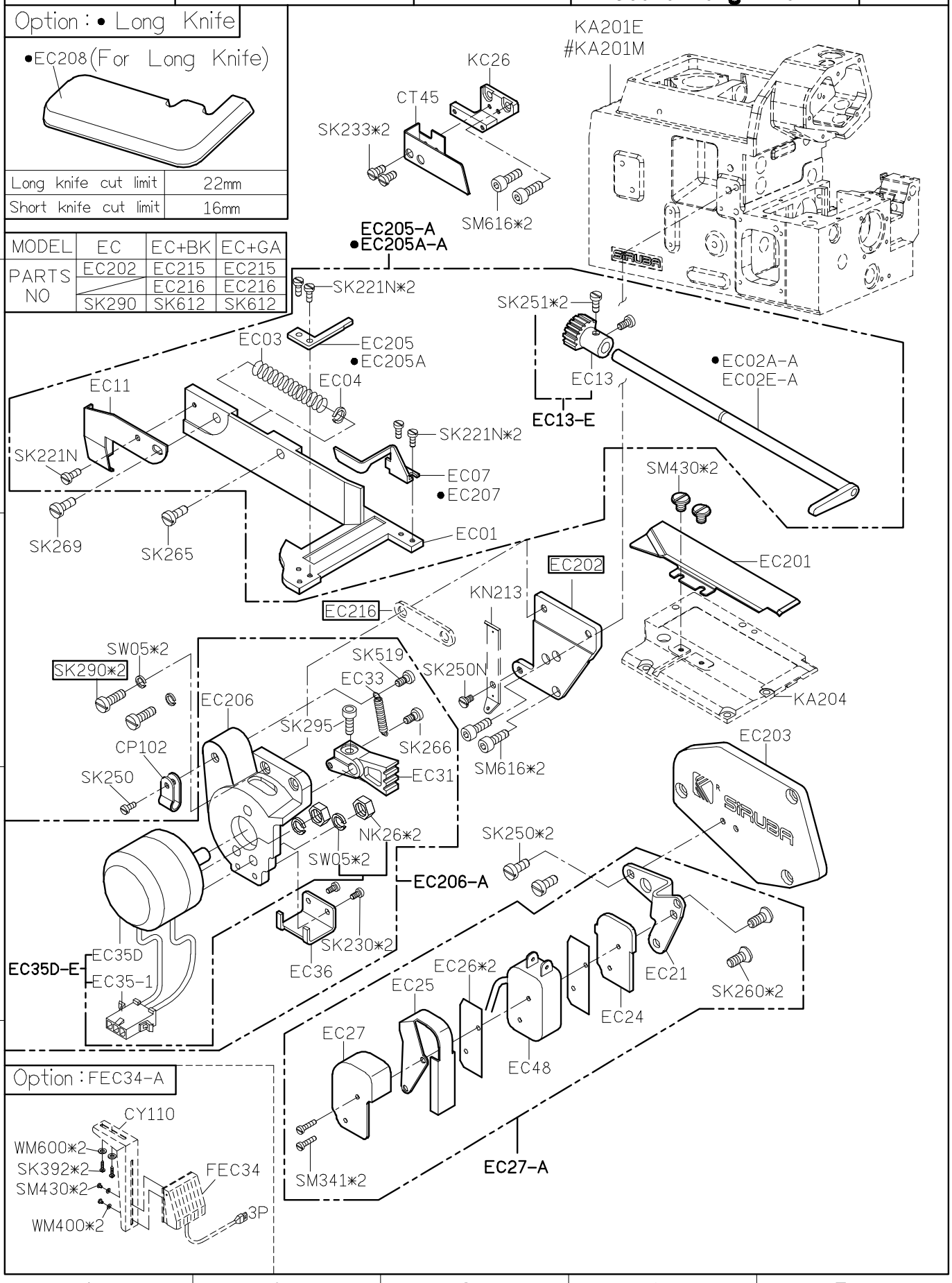

SIRUBA PARTS LIST	Series	Parts Group	Subclass / Remark	Page
	700K/700KD 988/988D	EC-K		2/4
				Date
				2012/11/16

FE202-A

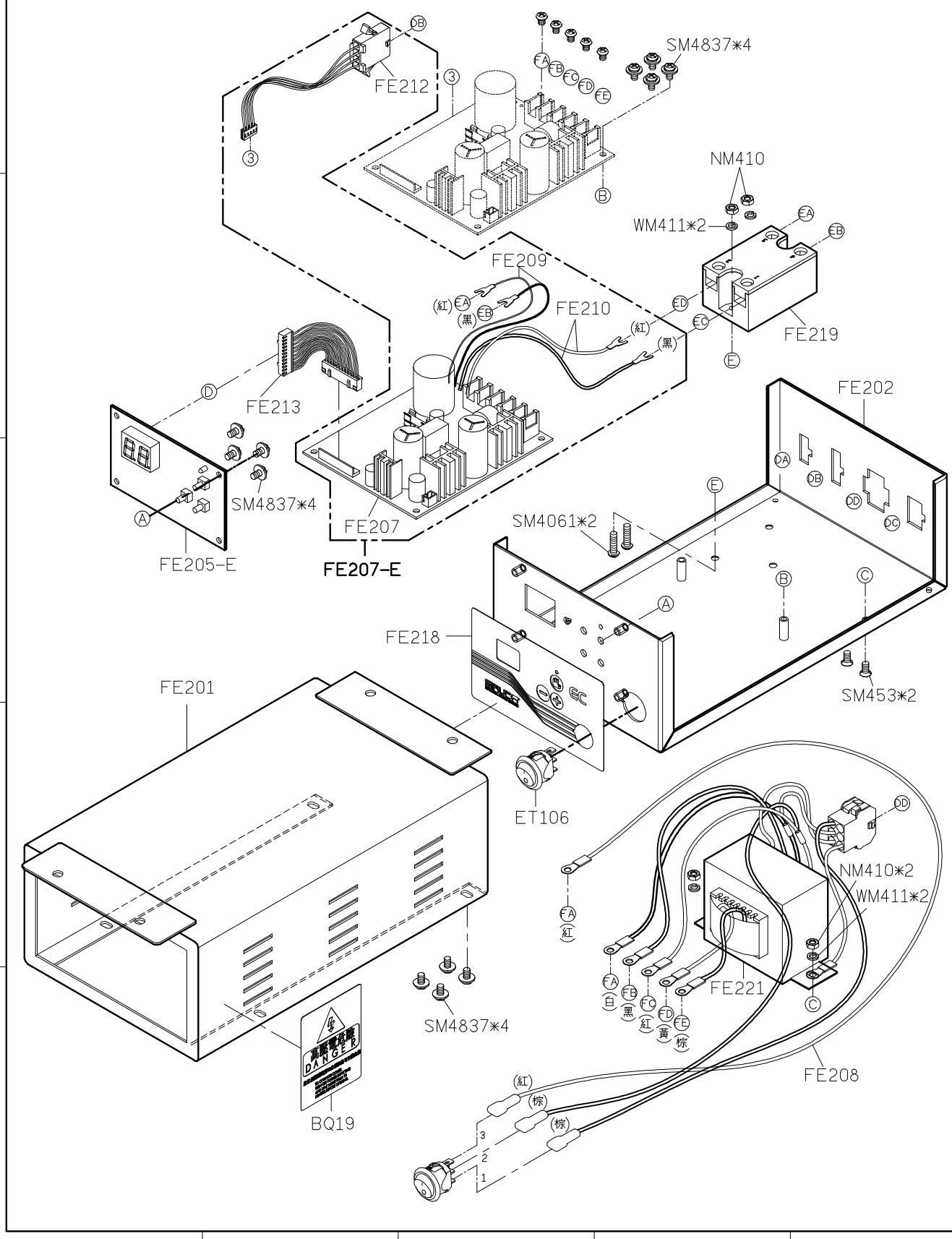

SIRUBA PARTS LIST	Series	Parts Group	Subclass / Remark	Page
	700K/700KD 988/988D	EC-K		3/4
				Date
				2012/11/16

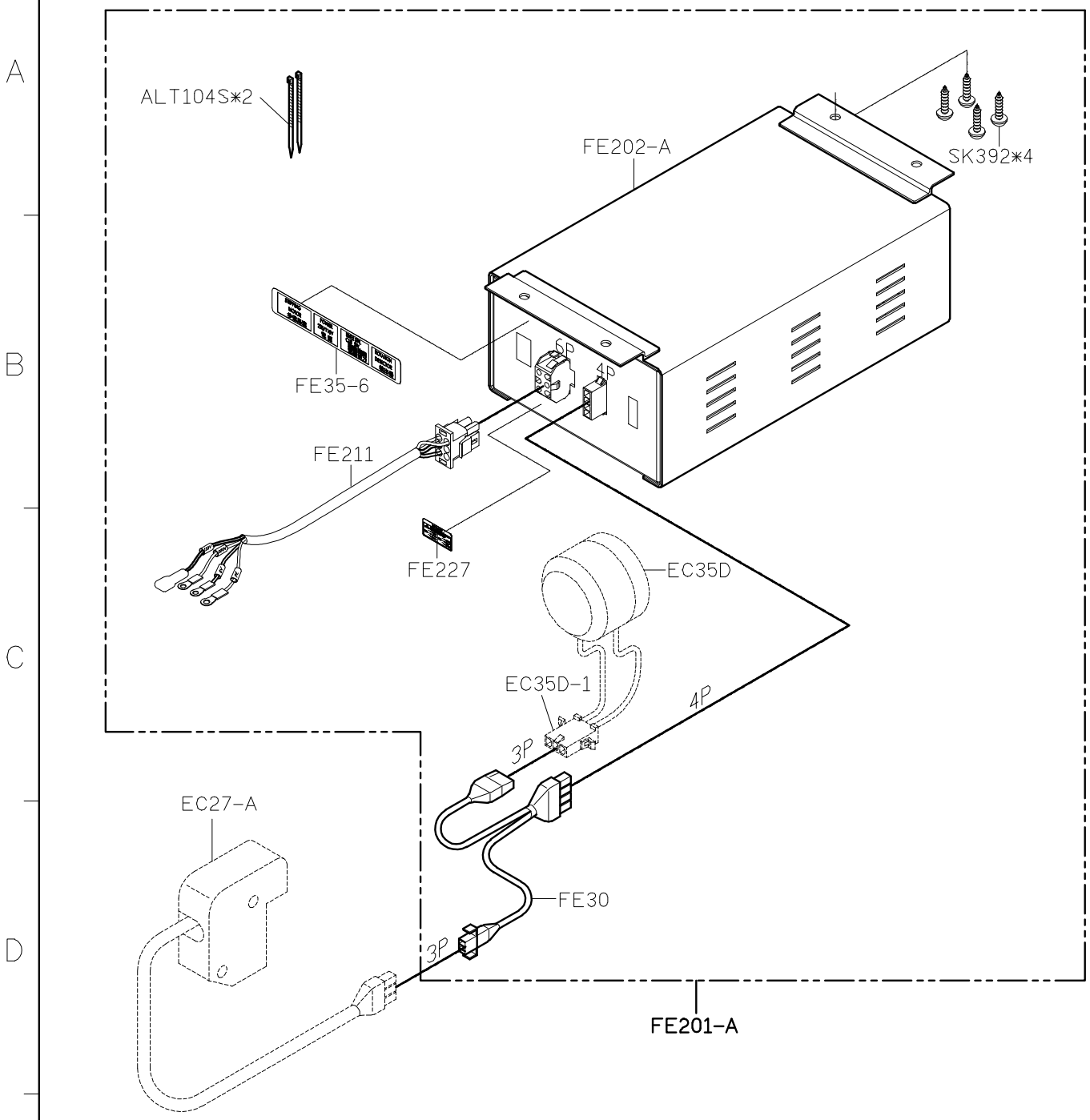

SIRUBA PARTS LIST	Series	Parts Group	Subclass / Remark	Page
	700K/700KD 988/988D	EC-K		4/4
				Date
				2012/11/16

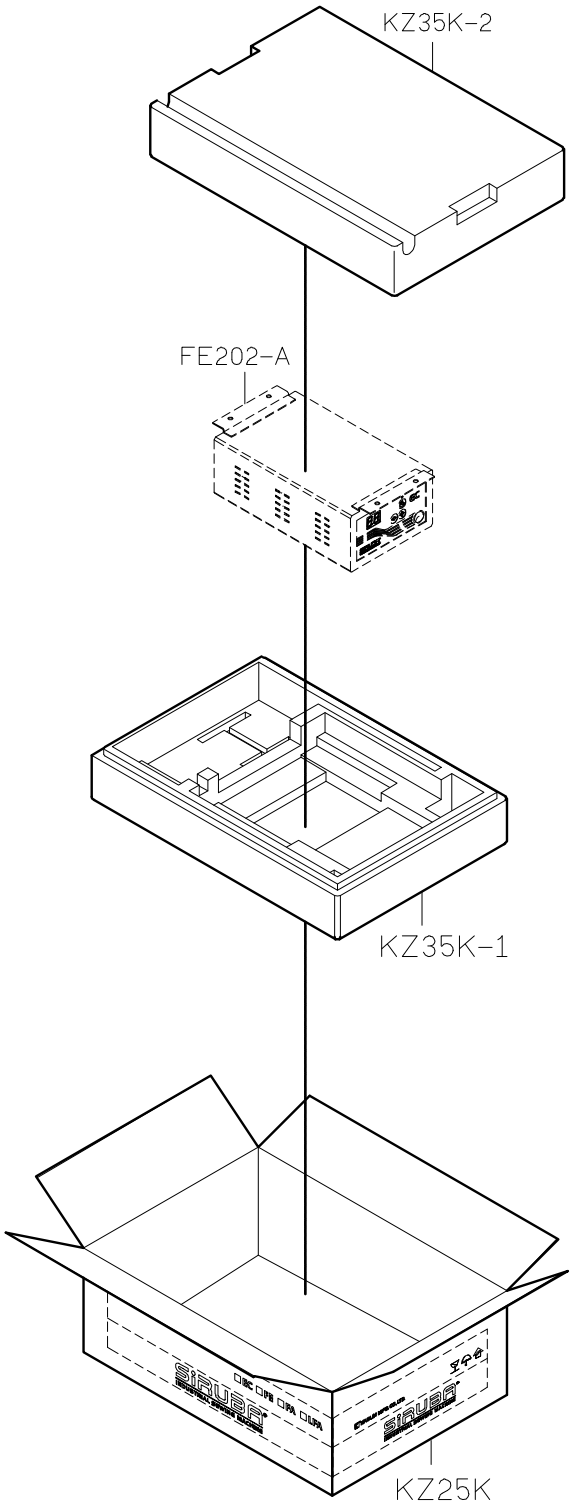

SIRUBA PARTS LIST	Series	Parts Group	Subclass / Remark	Page
	700K/700KD 988/988D	ET-K	#: Use for 700K/988	1/3
				Date
				2012/12/18

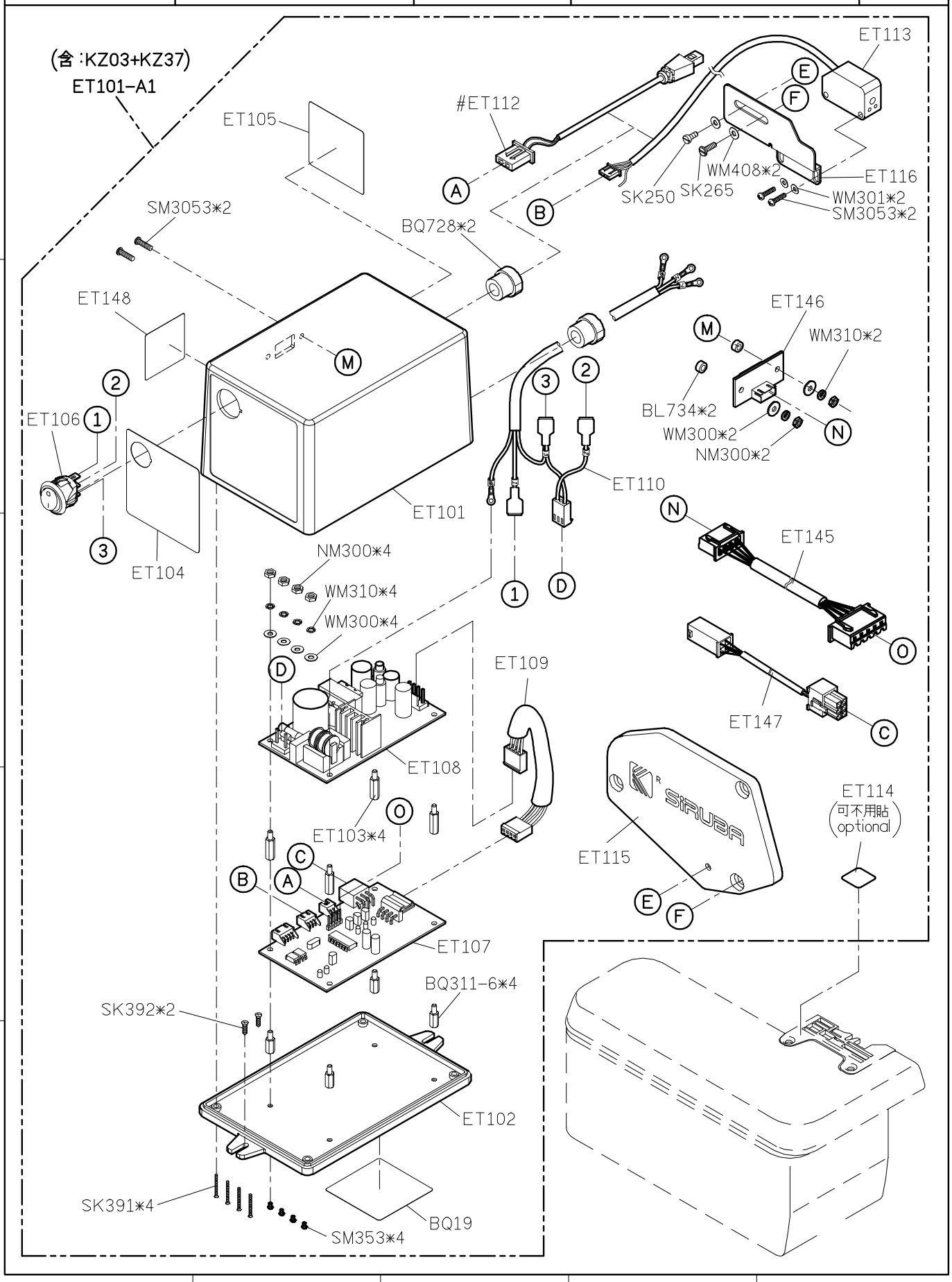

SIRUBA PARTS LIST	Series	Parts Group	Subclass / Remark	Page
	700K/700KD 988/988D	ET-K		2/3
				Date
				2012/12/18

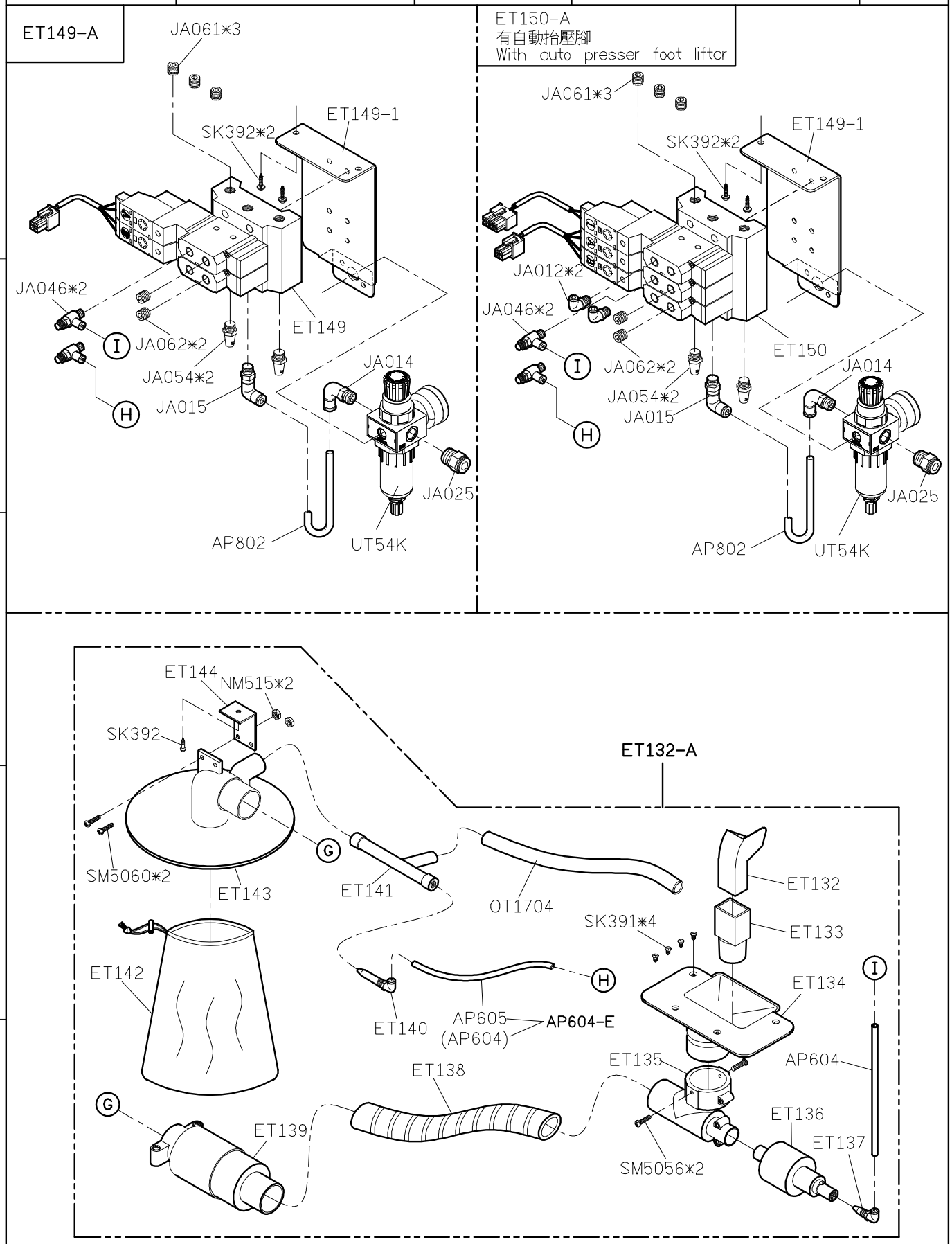

SIRUBA PARTS LIST	Series	Parts Group	Subclass / Remark	Page
	700K/700KD 988/988D	ET-K		3/3
				Date
				2012/12/18

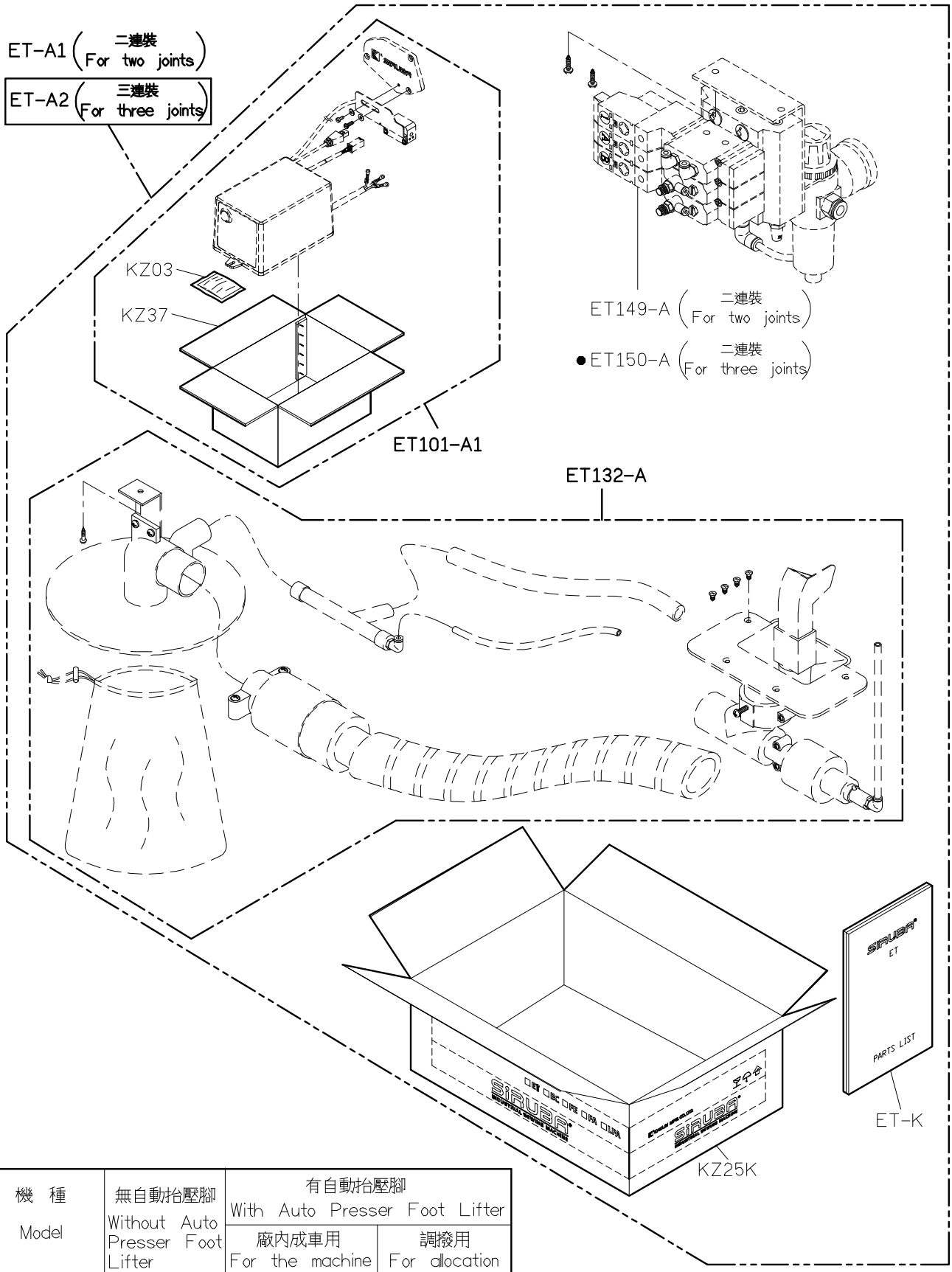

機 種 Model	無自動抬壓腳 Without Auto Presser Foot Lifter	有自動抬壓腳 With Auto Presser Foot Lifter	
		廠內成車用 For the machine	調撥用 For allocation
700K/988	ET-A1	ET-A2	ET-A2-K
700KD/988D	ET-A1	ET-A2	ET-A2-KD

SIRUBA PARTS LIST	Series	Parts Group	Subclass Remark	Page
	700K/700KD 988/988D	FLP-1	Use for 700KD/988D only	1/1
				Date
				2012/12/18

MODEL	BK/GA	Other Devices
PARTS NO	KS248	KS249
	KS248-A	KS249-A
	FLP-1B	FLP-1A
OPTION	FLP-1	

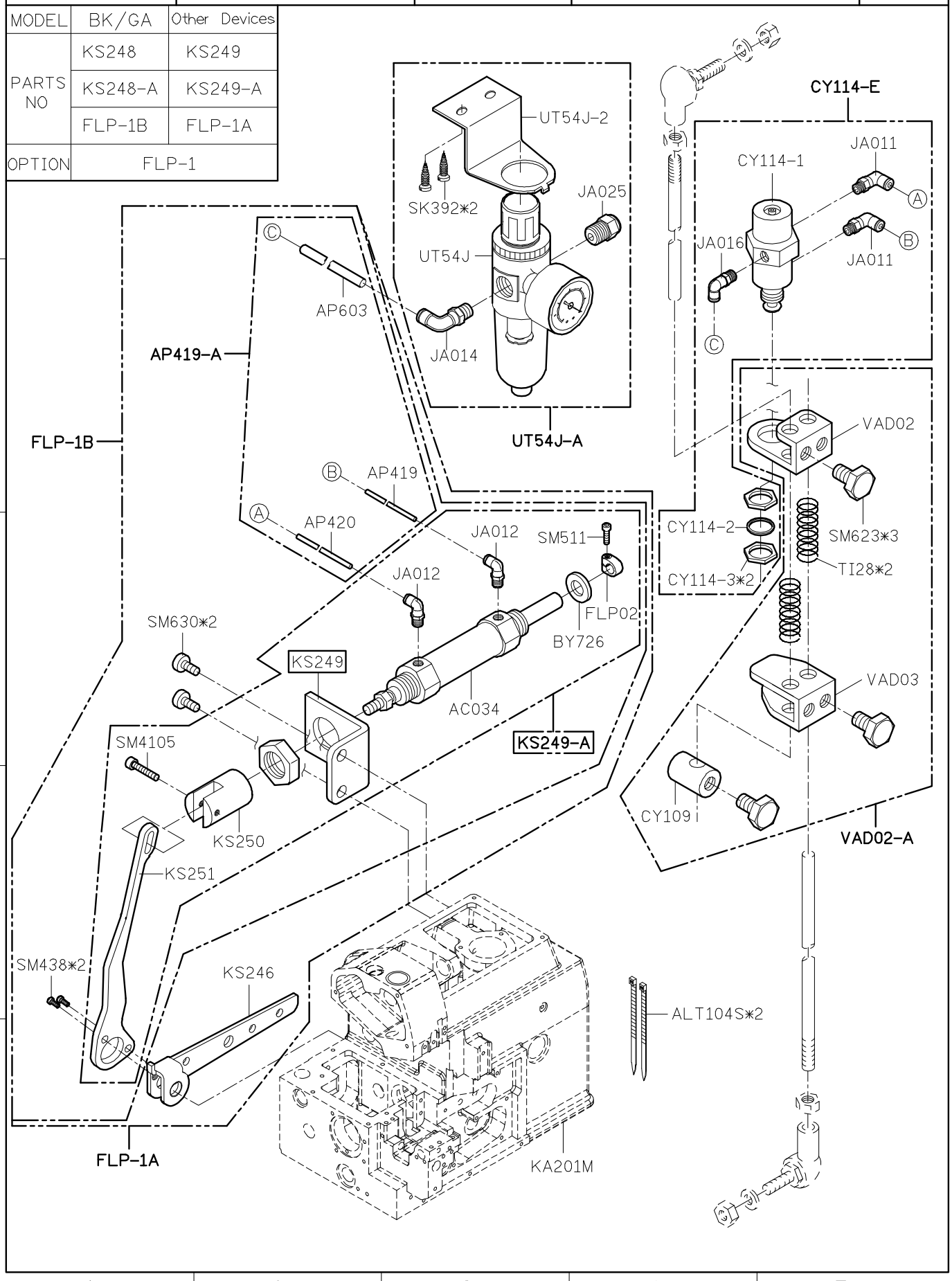

SIRUBA PARTS LIST	Series	Parts Group	Subclass / Remark	Page
	700K/700KD 988/988D	FLP	Use for 700K/988 only	1/1
				Date
				2012/12/18

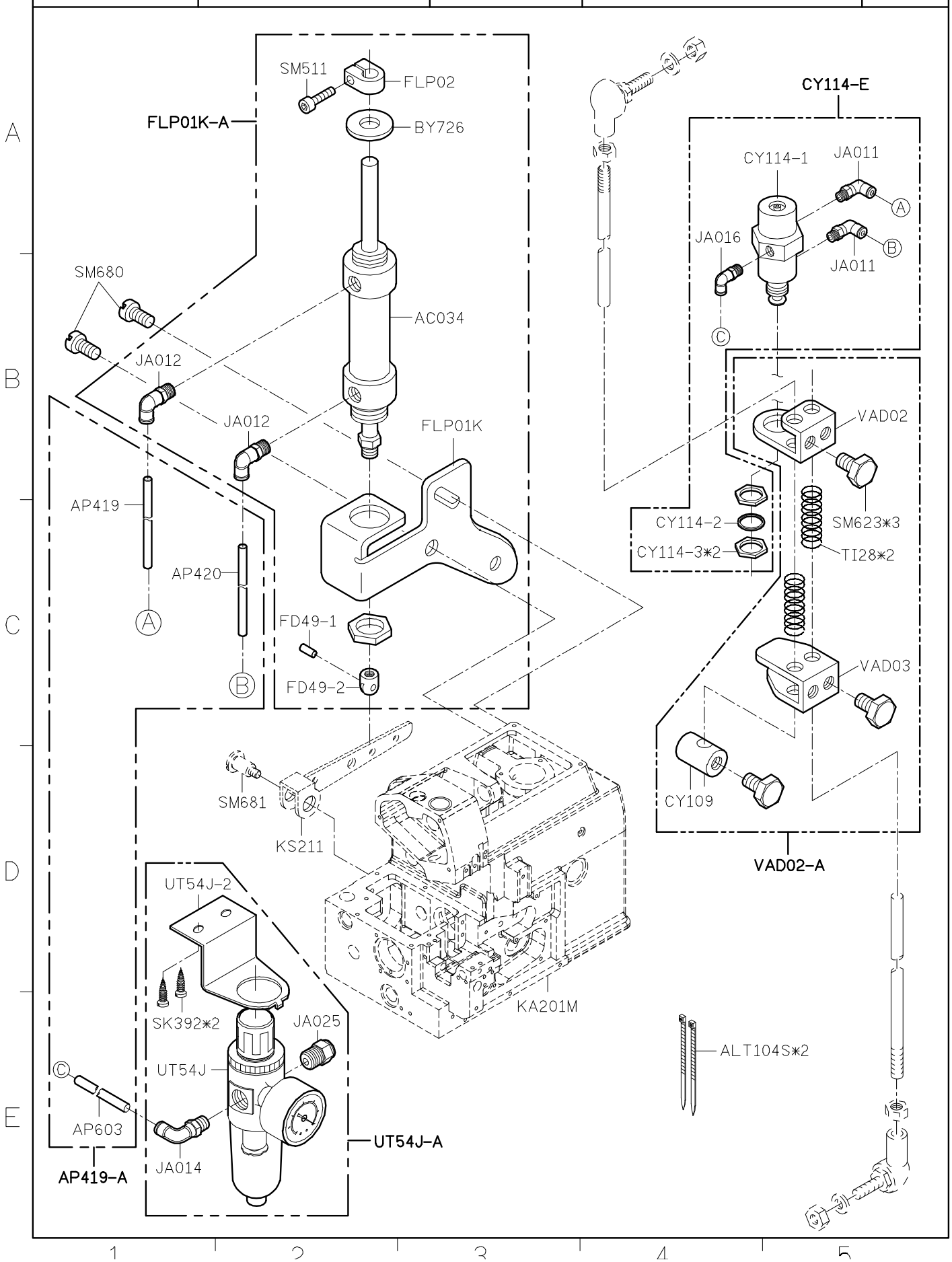

SIRUBA PARTS LIST	Series	Parts Group	Subclass / Remark	Page
	700K/700KD 988/988D	GA-K		1/1
				Date
				2012/12/18

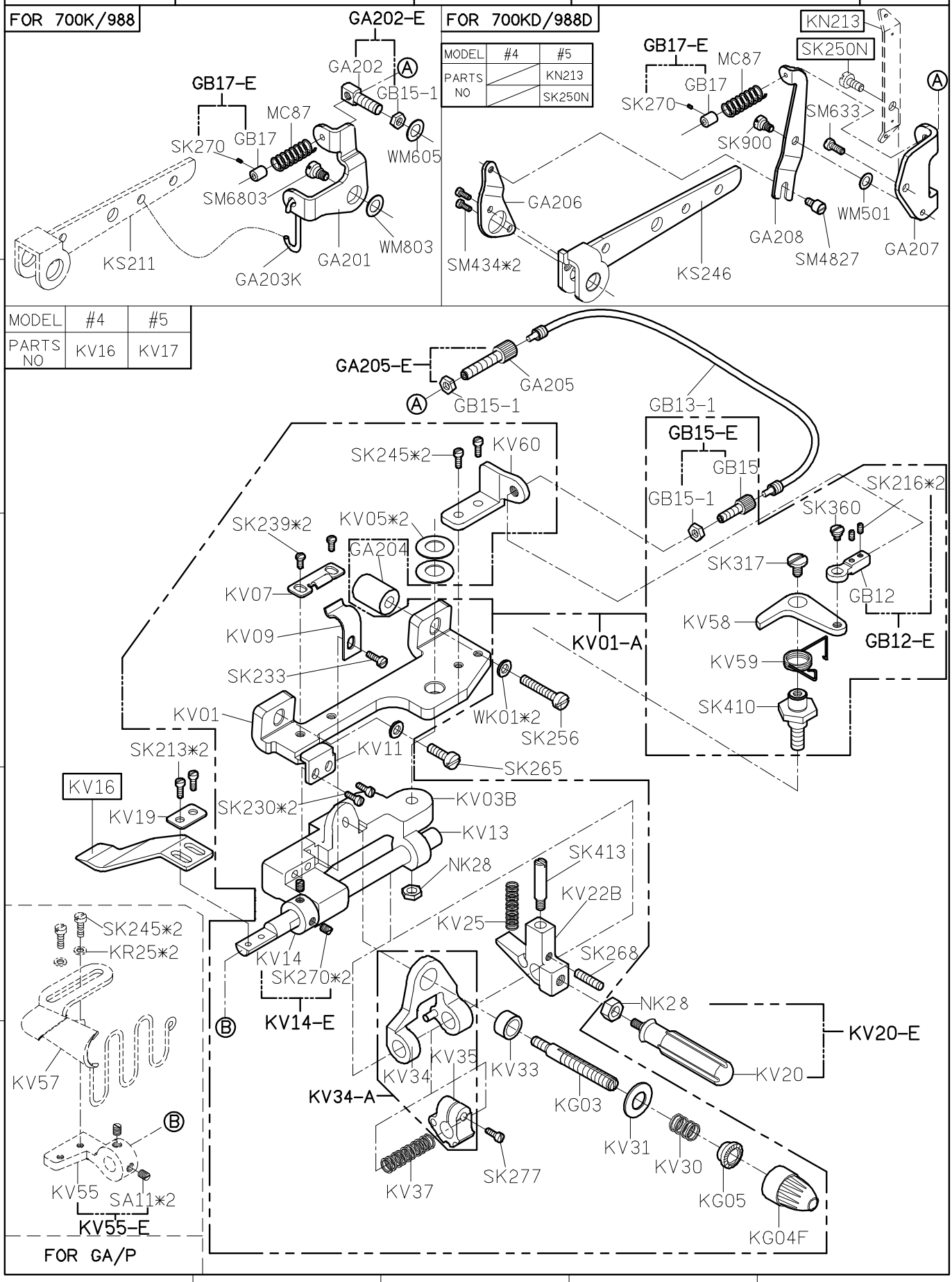

SIRUBA PARTS LIST	Series	Parts Group	Subclass / Remark	Page
	700K/700KD 988/988D	GAL-K		1/1
				Date
				2012/12/18

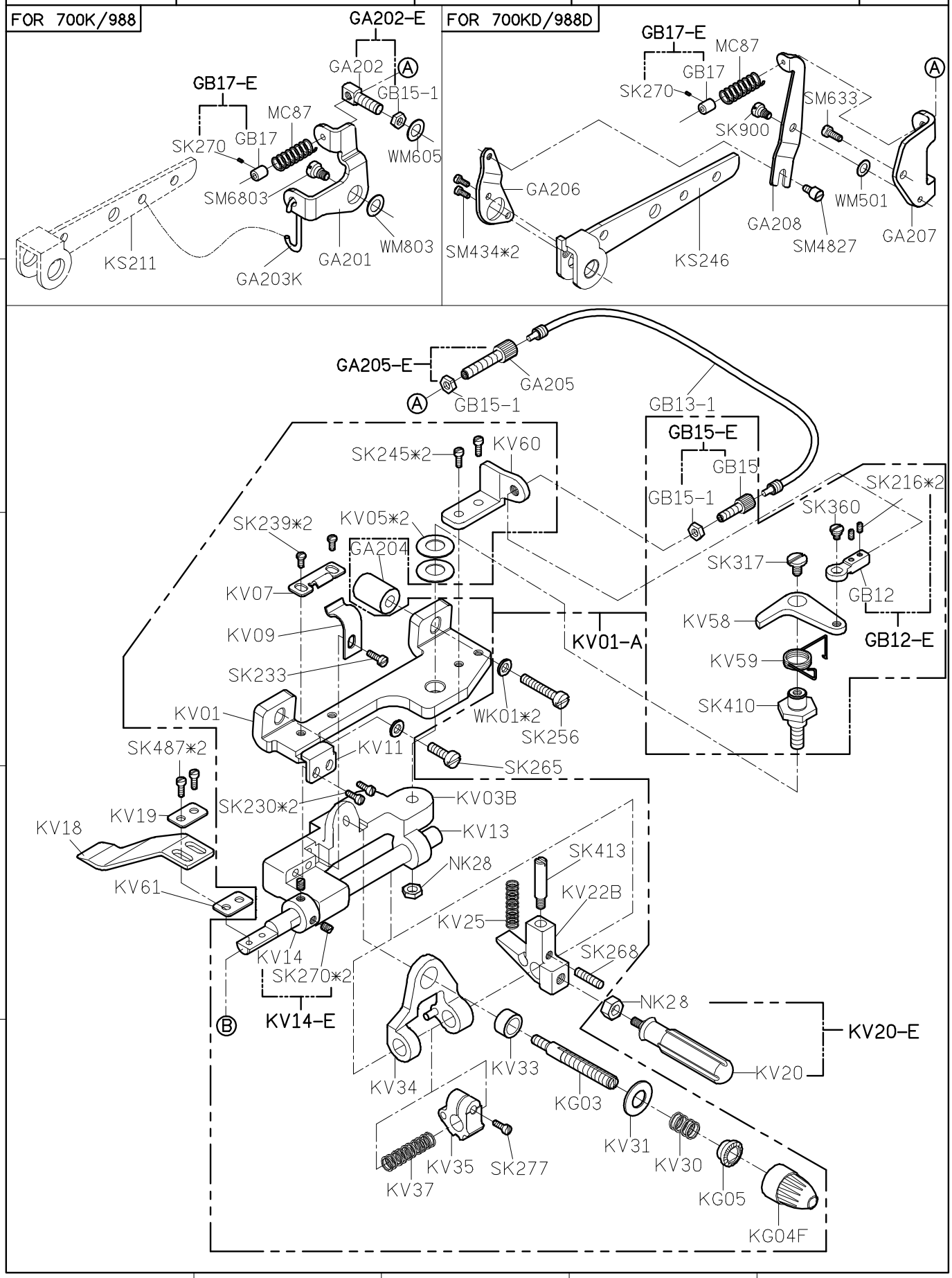

SIRUBA PARTS LIST	Series	Parts Group	Subclass / Remark	Page
	700K/700KD 988/988D	GA-L		1/1
				Date
				2012/08/18

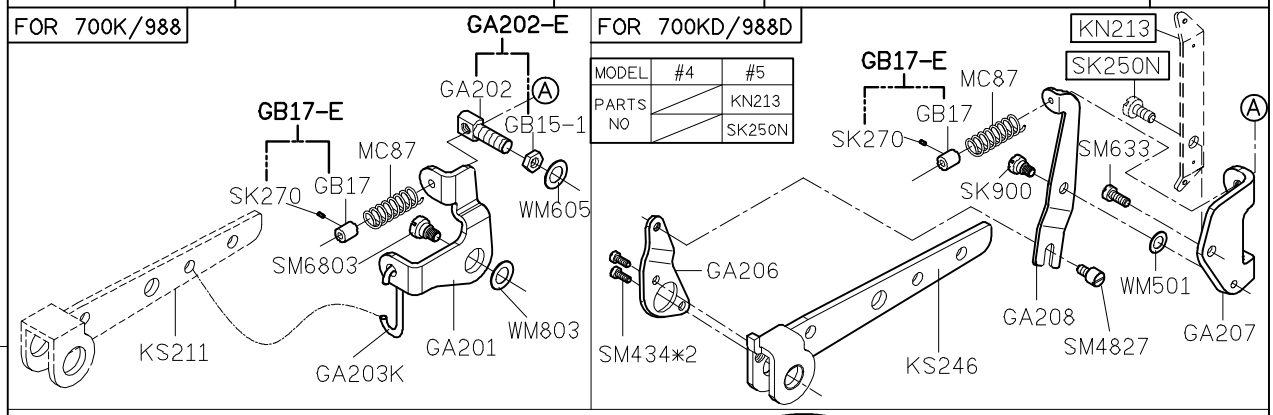

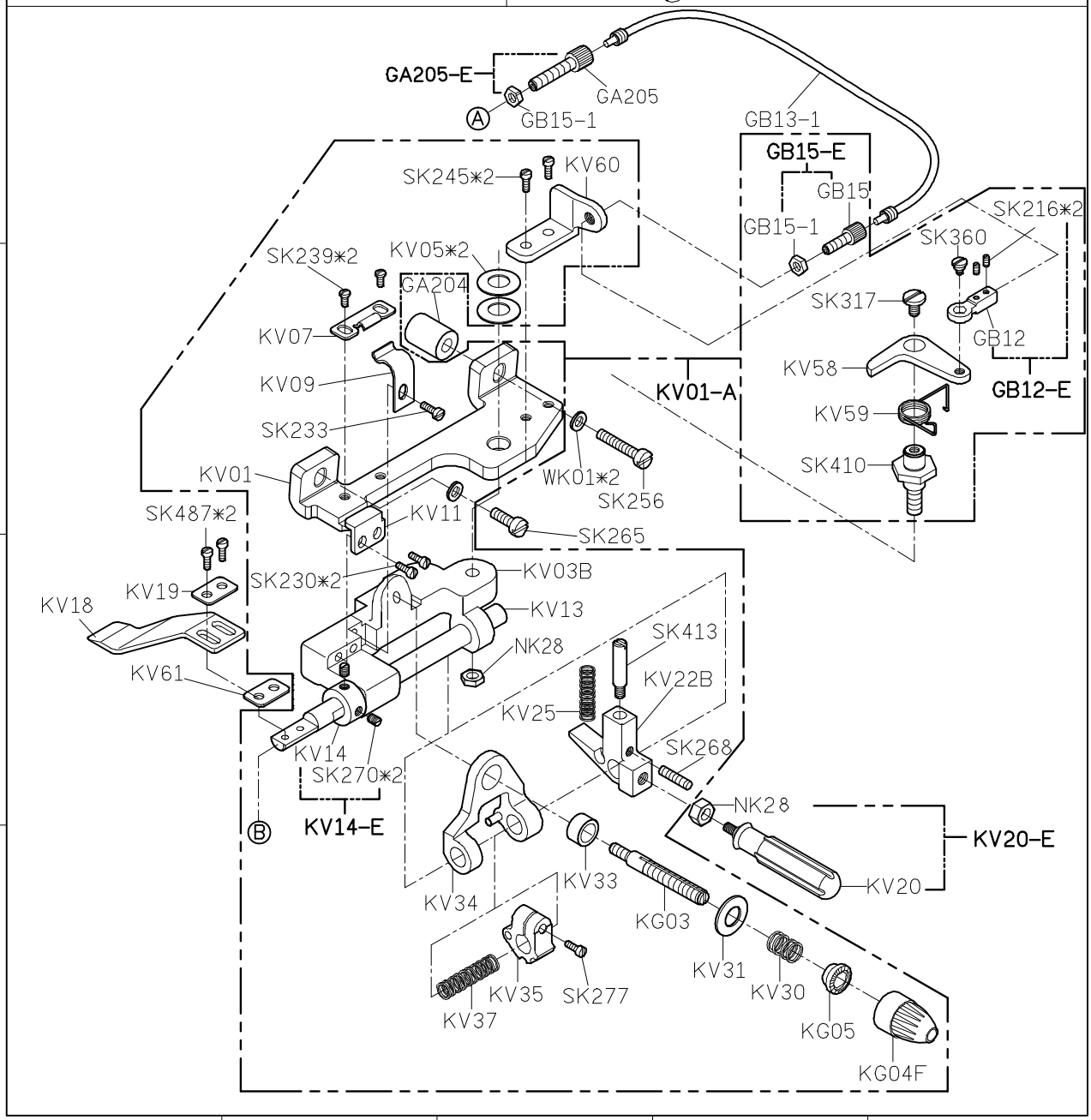

SiRUBA PARTS LIST	Series	Parts Group	Subclass / Remark	Page
	700K/700KD 988/988D	KA	∗: Use for 700KD/988D	1/1
				Date
				2012/08/18

MODEL	700K/KD	988/988D
PARTS NO	KC230	KC231

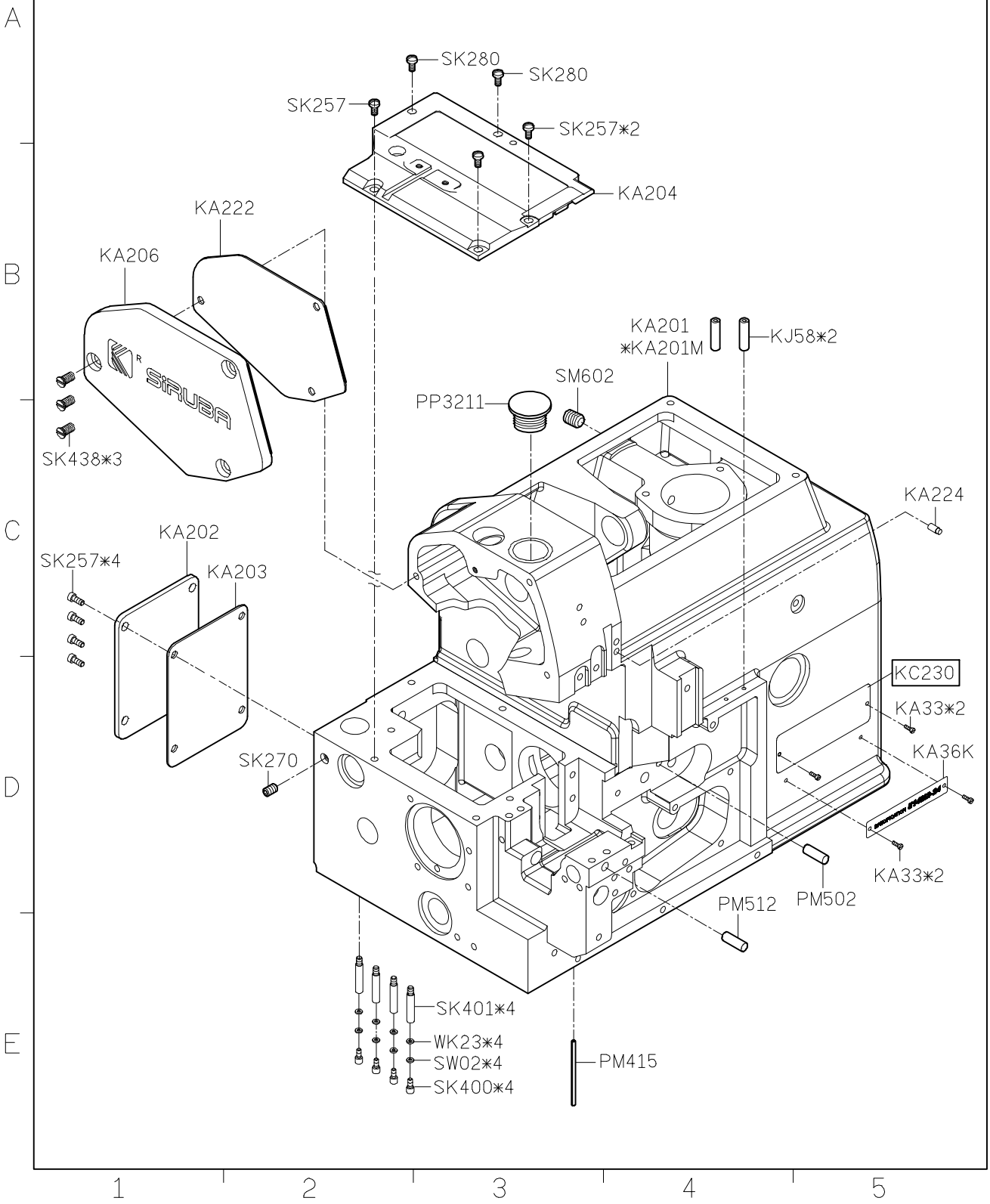

SIRUBA PARTS LIST	Series	Parts Group	Subclass / Remark	Page
	700K/700KD 988/988D	KB		1/1
				Date
				2012/08/18

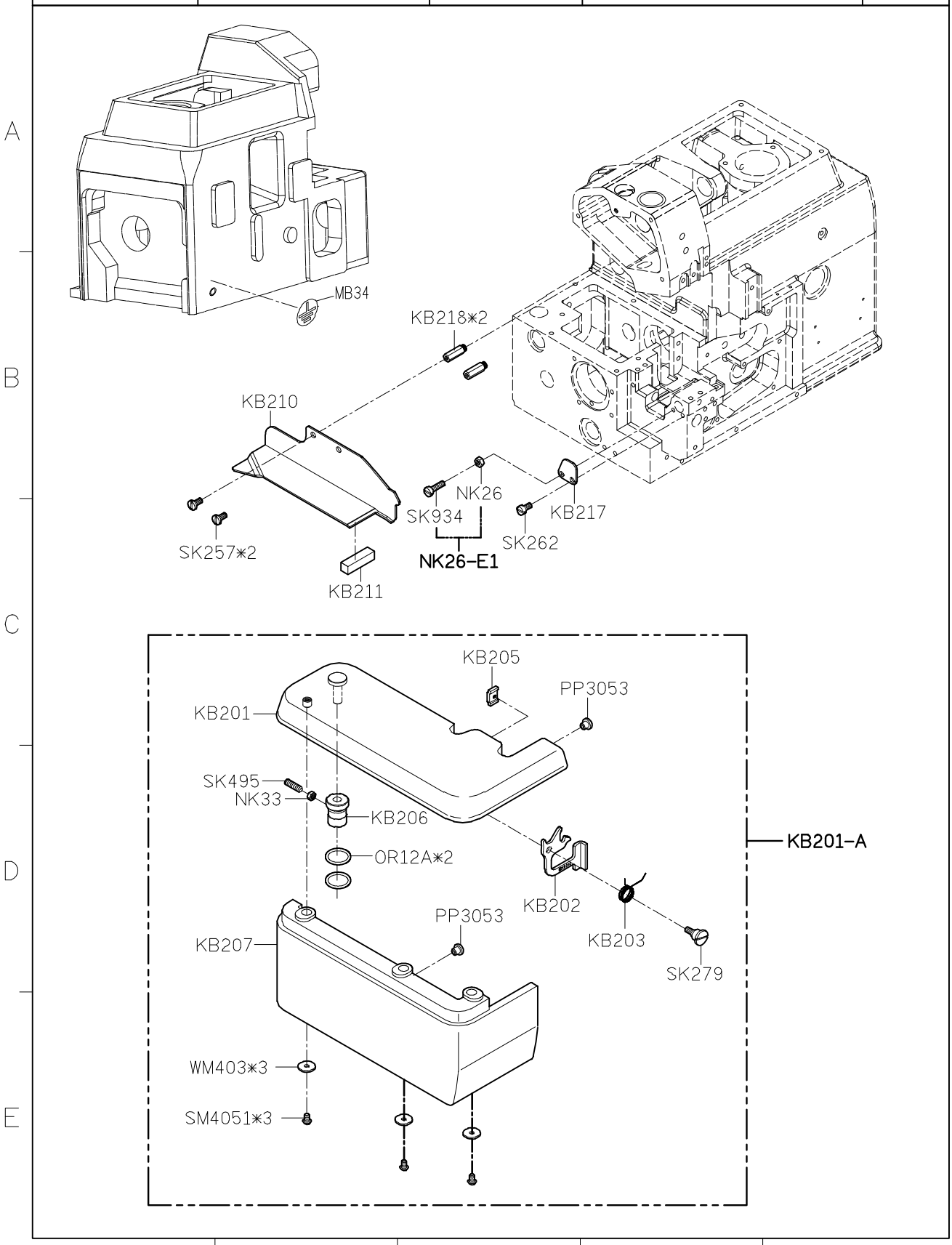

SiRUBA PARTS LIST	Series	Parts Group	Subclass / Remark	Page
	700K/700KD 988/988D	KC	＊: Use for 988	1/1
				Date
				2012/08/18

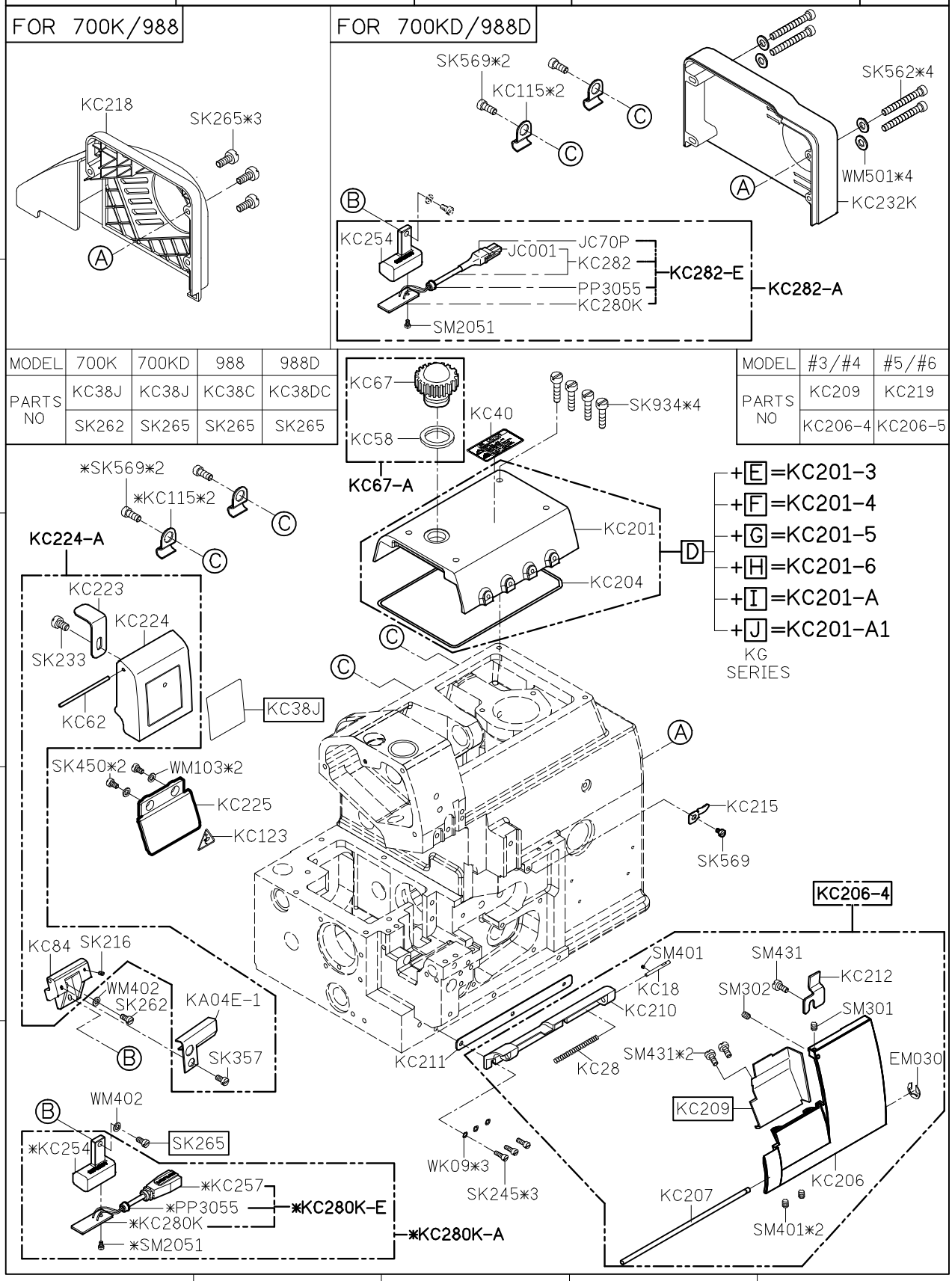

MODEL	700K	700KD	988	988D
PARTS NO	KC38J	KC38J	KC38C	KC38DC
	SK262	SK265	SK265	SK265

MODEL	#3/#4	#5/#6
PARTS NO	KC209	KC219
	KC206-4	KC206-5

SIRUBA PARTS LIST	Series	Parts Group	Subclass / Remark	Page
	700K/700KD 988/988D	KD	H FOR H MOTOR Y FOR Y MOTOR	1/1
				Date
				2012/08/18

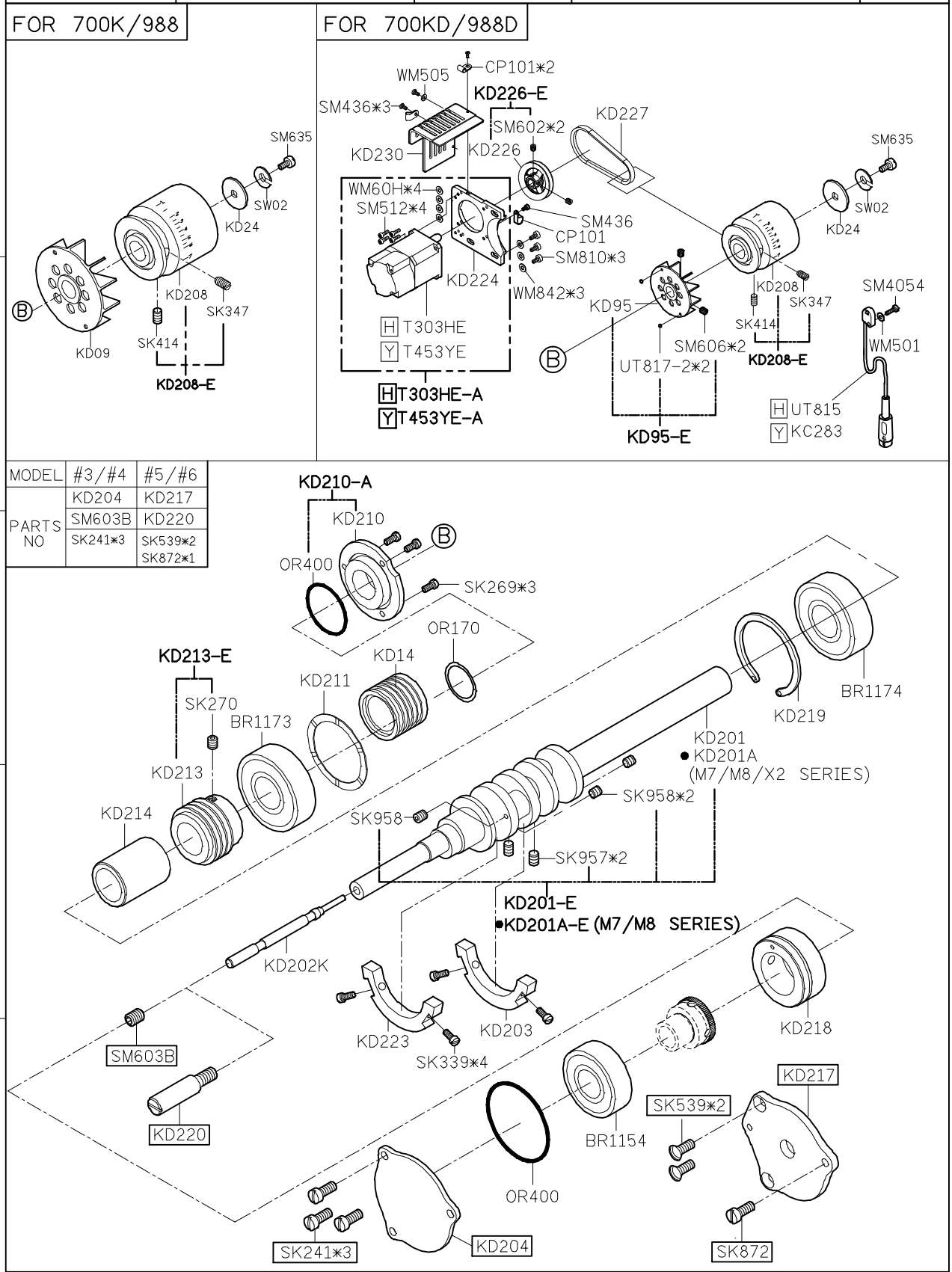

SIRUBA PARTS LIST	Series	Parts Group	Subclass / Remark	Page
	700K/700KD 988/988D	KF		1/1
				Date
				2012/12/22

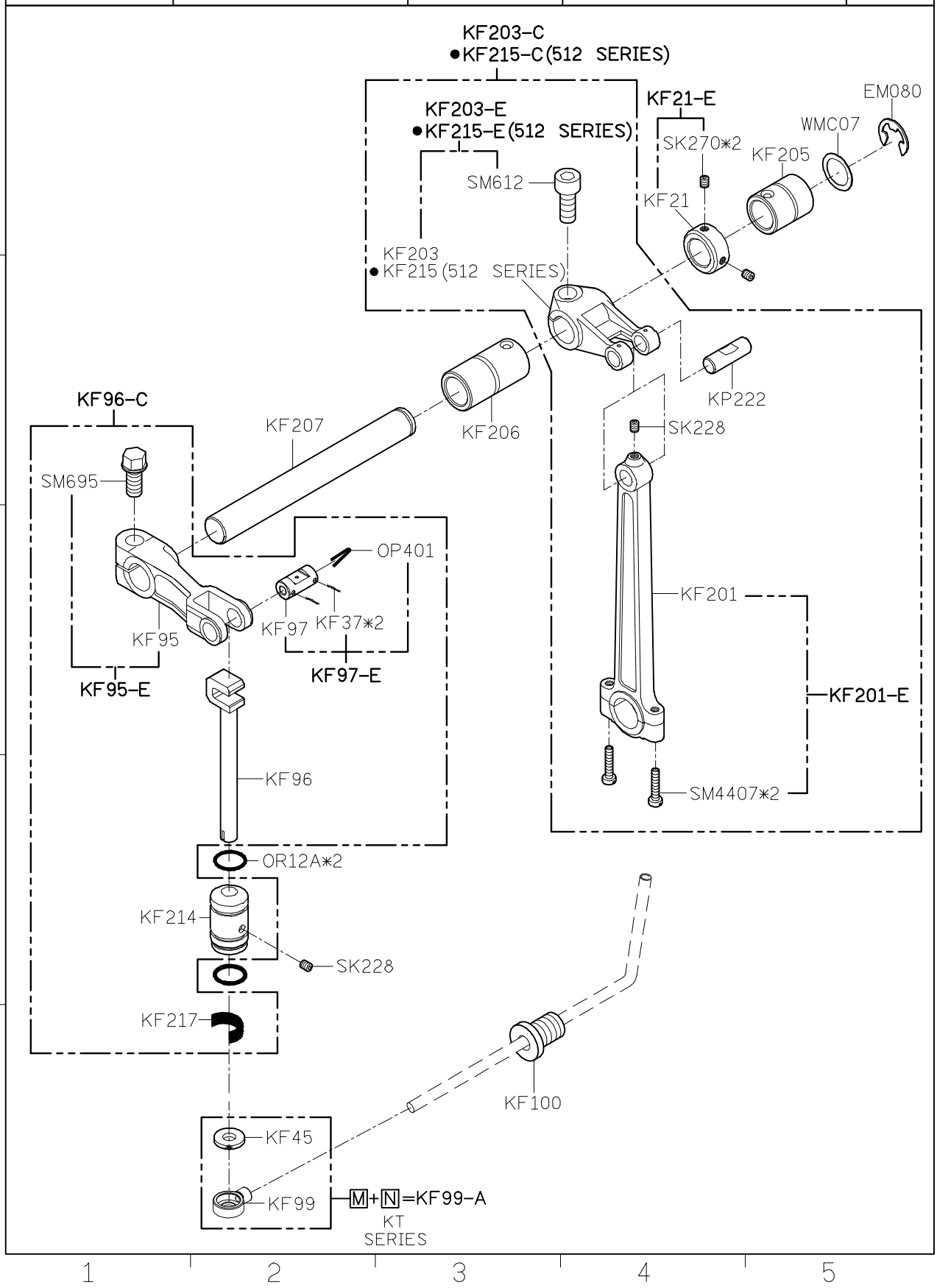

SIRUBA PARTS LIST	Series	Parts Group	Subclass / Remark	Page
	700K/700KD 988/988D	KG		1/1
				Date
				2012/08/18

MODEL	#3	#4	#5	#6
PARTS NO	KG237	KG211	KG237	KG211
	KG248	KG213	KG236	KG249
	KG250	KG221	KG243	KG251
	KG222	KG222	KG245	KG245
	KG225	KG225	KG261	KG261
	KG201	KG201	KG244	KG244
	KG93	KG92	KG94	KG94
	SK216	SK216	SK216*2	SK216*2
	SK250N	SK250N	SK250N*2	SK250N*2
	SK437N	SK437N	SK569 SK674N	SK569 SK674N
	SM251	SM251	SM250	SM250
	KG212-3	KG212-4	KG241-5	KG241-6
	KG223-4	KG223-4	KG223-5	KG223-5

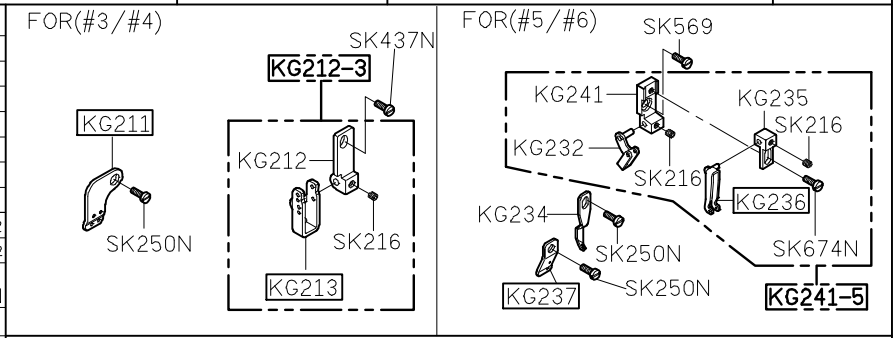

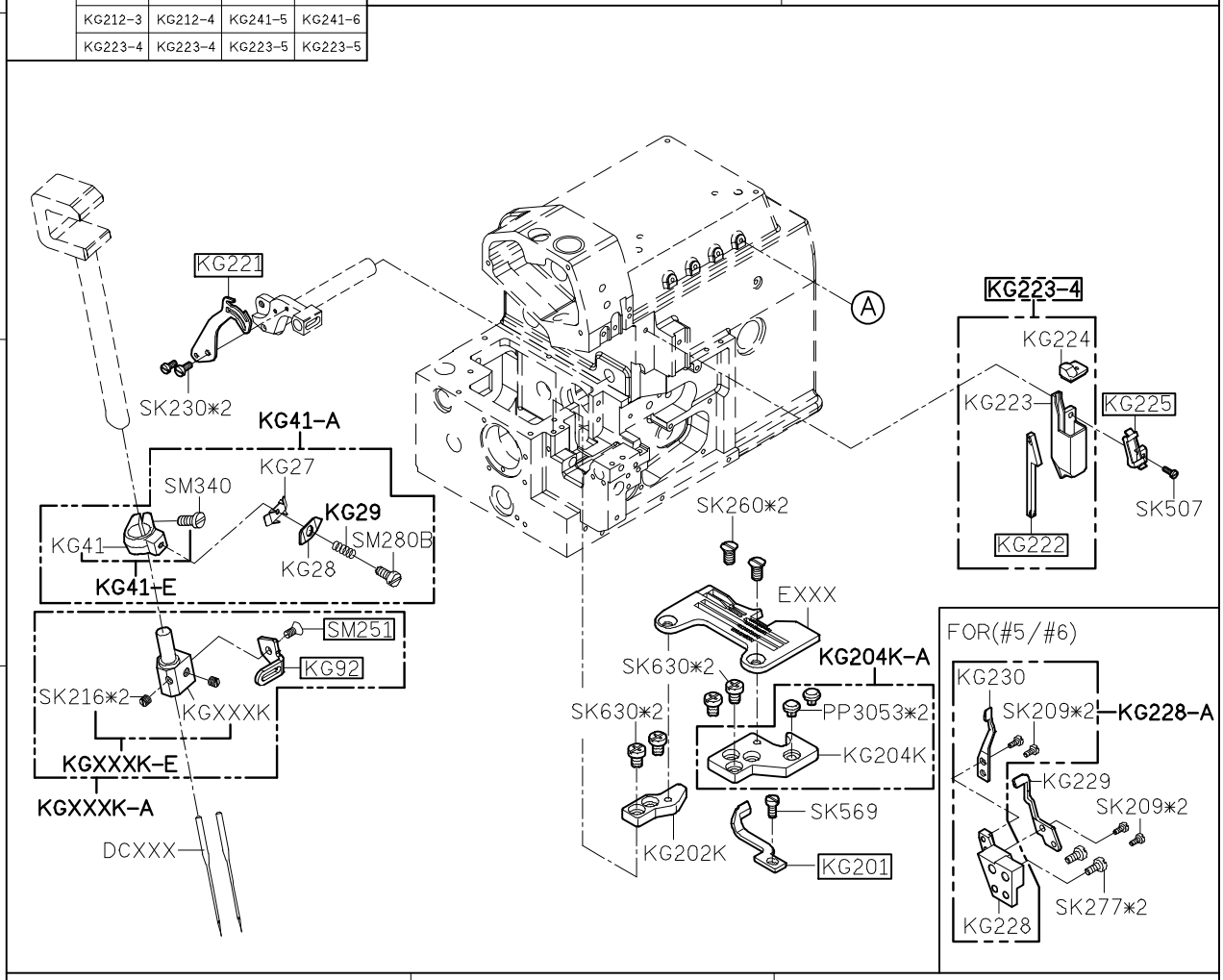

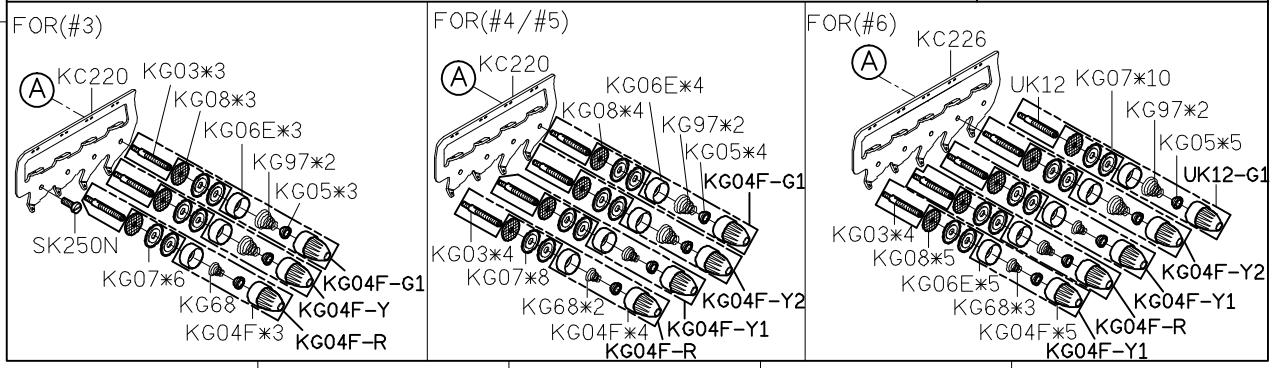

SIRUBA PARTS LIST	Series	Parts Group	Subclass / Remark	Page
	700K/700KD 988/988D	KJ		1/1
				Date
				2012/08/18

MODEL	#3/#5	#4/#6	#4 M7/M8/M2-28	#5 X2
PARTS NO	KJ204	KJ234K	KJ204K	KJ234K+KJ234
	KJ206	KJ203	KJ203	KJ206
	KJ206-E	KJ203-E	KJ203-E	KJ206-E
	KJ206-C	KJ203-C	KJ203-C	KJ206-C
	KJ236	KJ208	KJ228	KJ236
	KJ236-C	KJ208-C	KJ228-C	KJ236-C
	KJ219		KJ238	KJ238

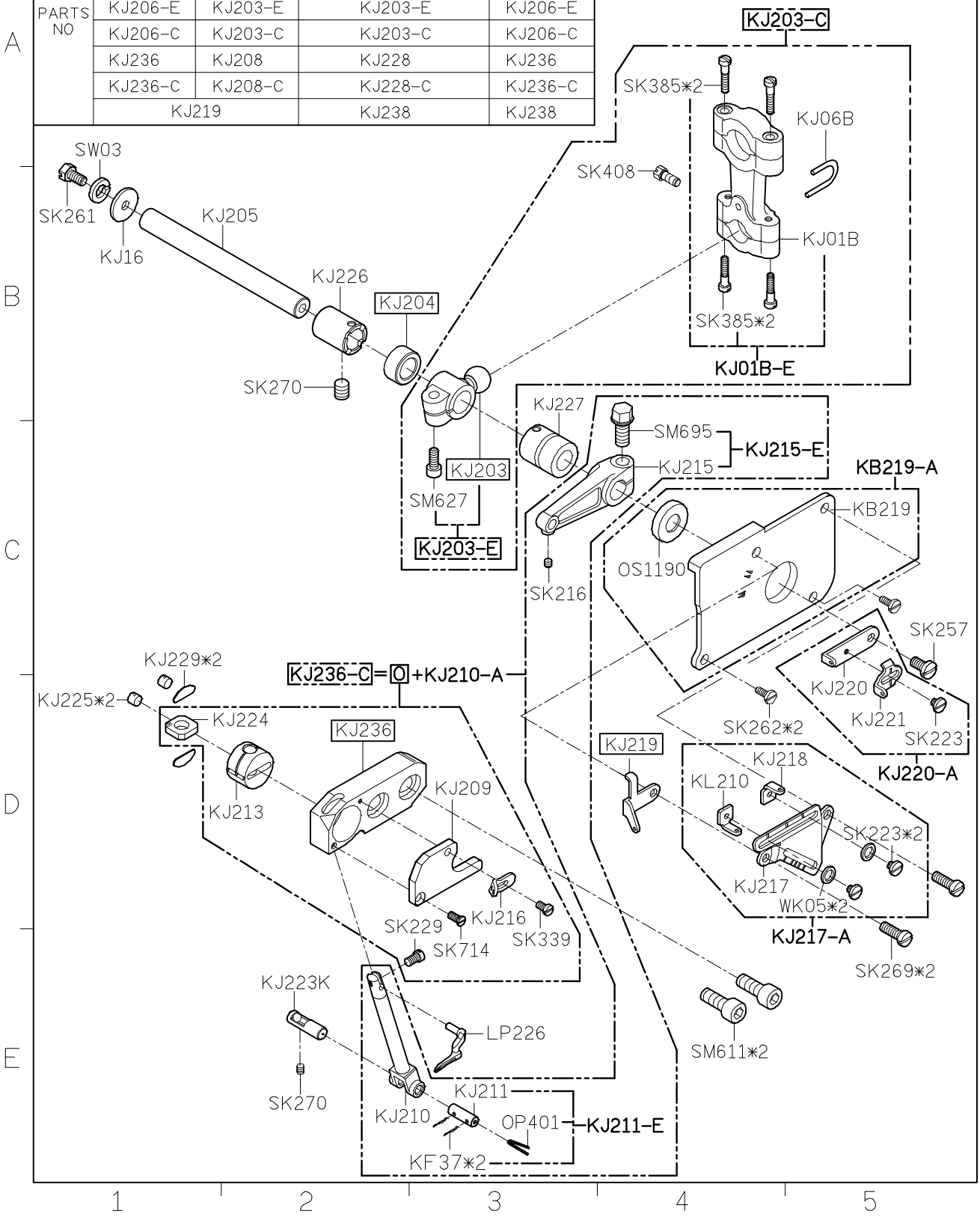

SiRUBA PARTS LIST	Series	Parts Group	Subclass / Remark	Page
	700K/700KD 988/988D	KL		1/1
				Date
				2012/08/18

MODEL	#3/#4	#5/#6	M7/X2 SERIES
PARTS NO	KL202		KL202A
	KL211-A		KL211-A1
	KL205	KL209	
		SK270	
	KL205-E	KL209-E	
	KL205-C	KL209-C	

KL SERIES + KL SERIES + KM SERIES = KL209-C

KL SERIES + KL SERIES = KL205-C

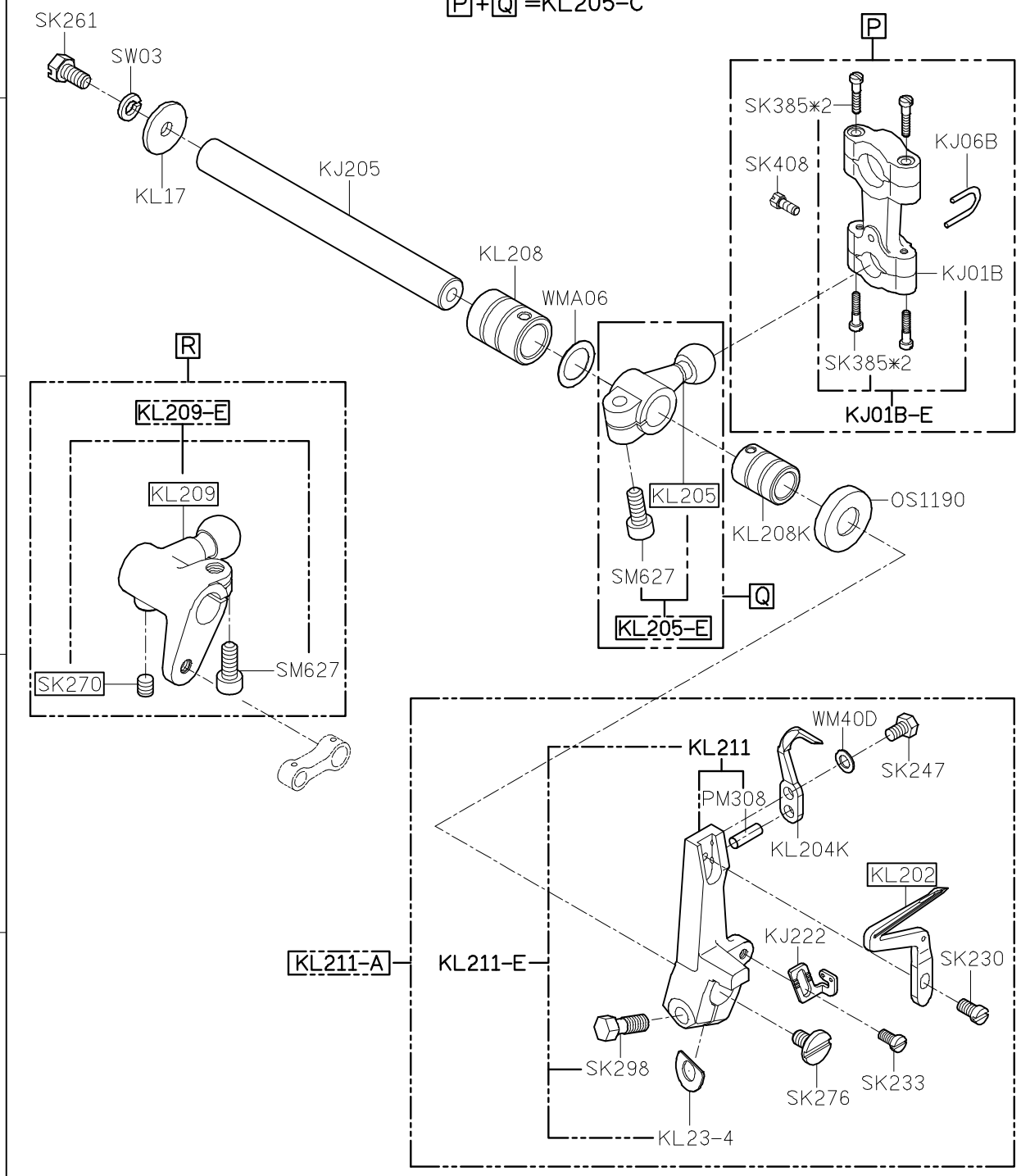

SiRUBA PARTS LIST	Series	Parts Group	Subclass / Remark	Page
	700K/700KD 988/988D	KM		1/1
				Date
				2012/08/18

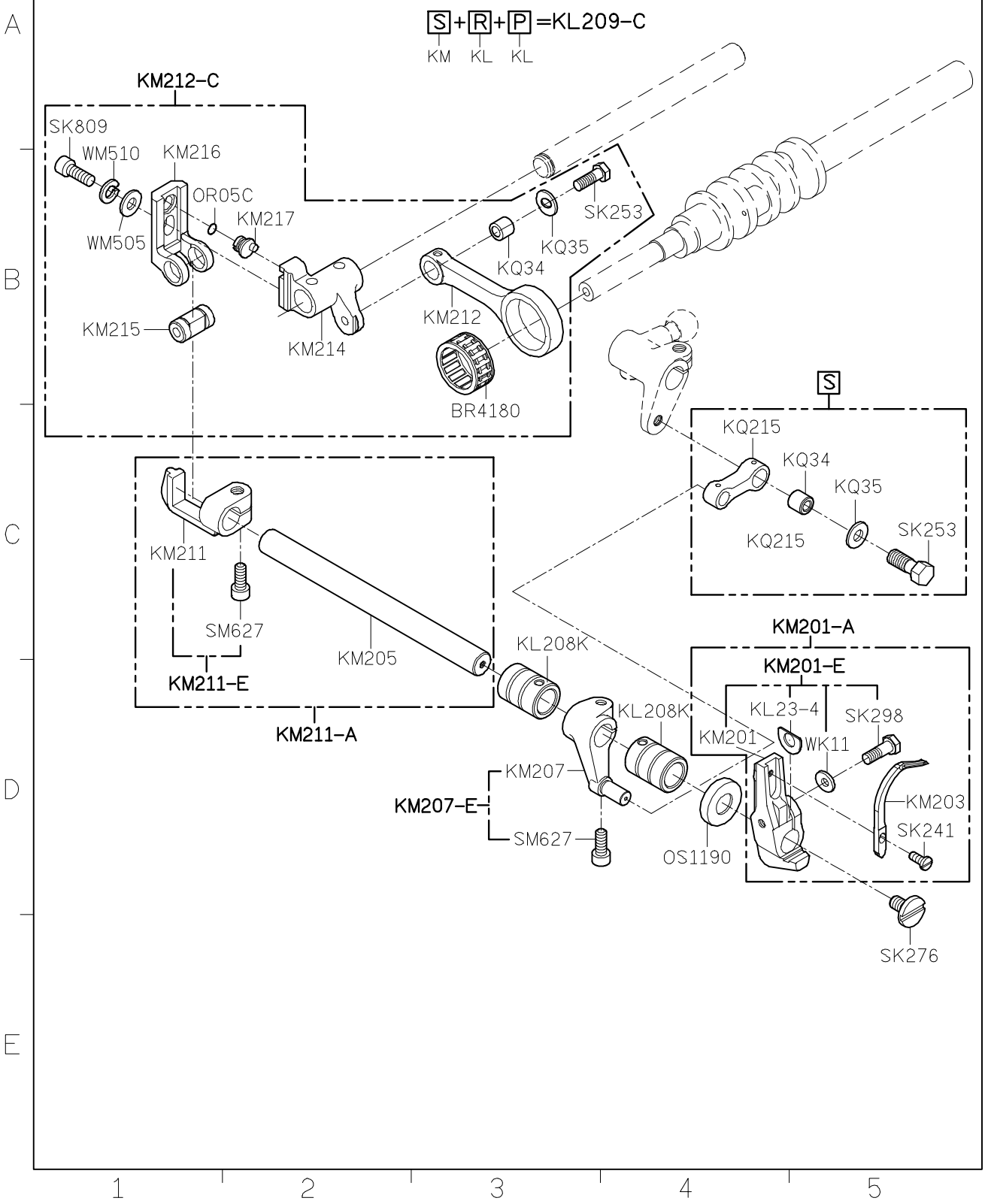

SIRUBA PARTS LIST	Series	Parts Group	Subclass / Remark	Page
	700K/700KD 988/988D	KN		1/1
				Date
				2012/08/18

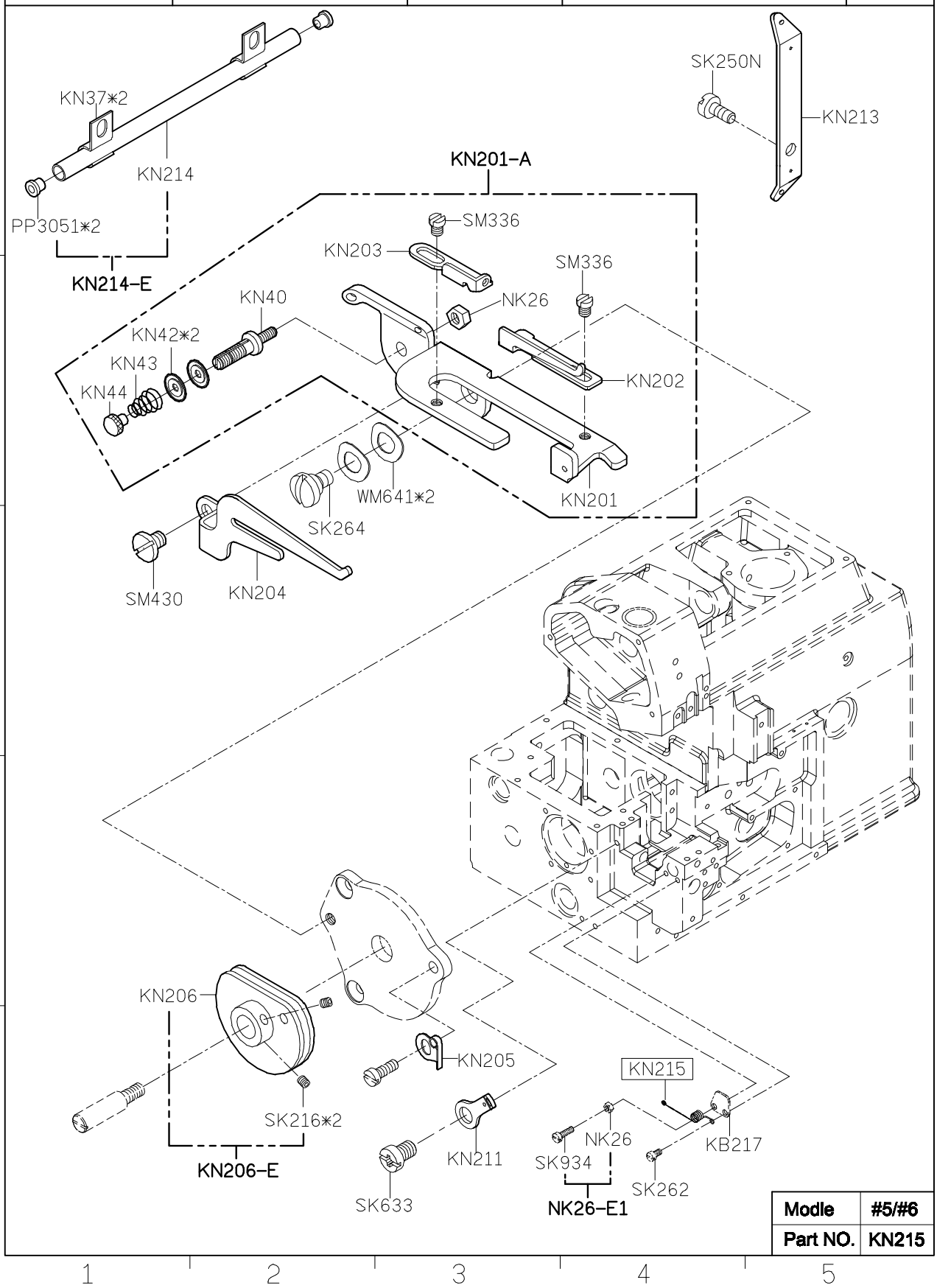

Modle	#5/#6
Part NO.	KN215

SIRUBA PARTS LIST	Series	Parts Group	Subclass / Remark	Page
	700K/700KD 988/988D	KP		1/1
				Date
				2012/12/19

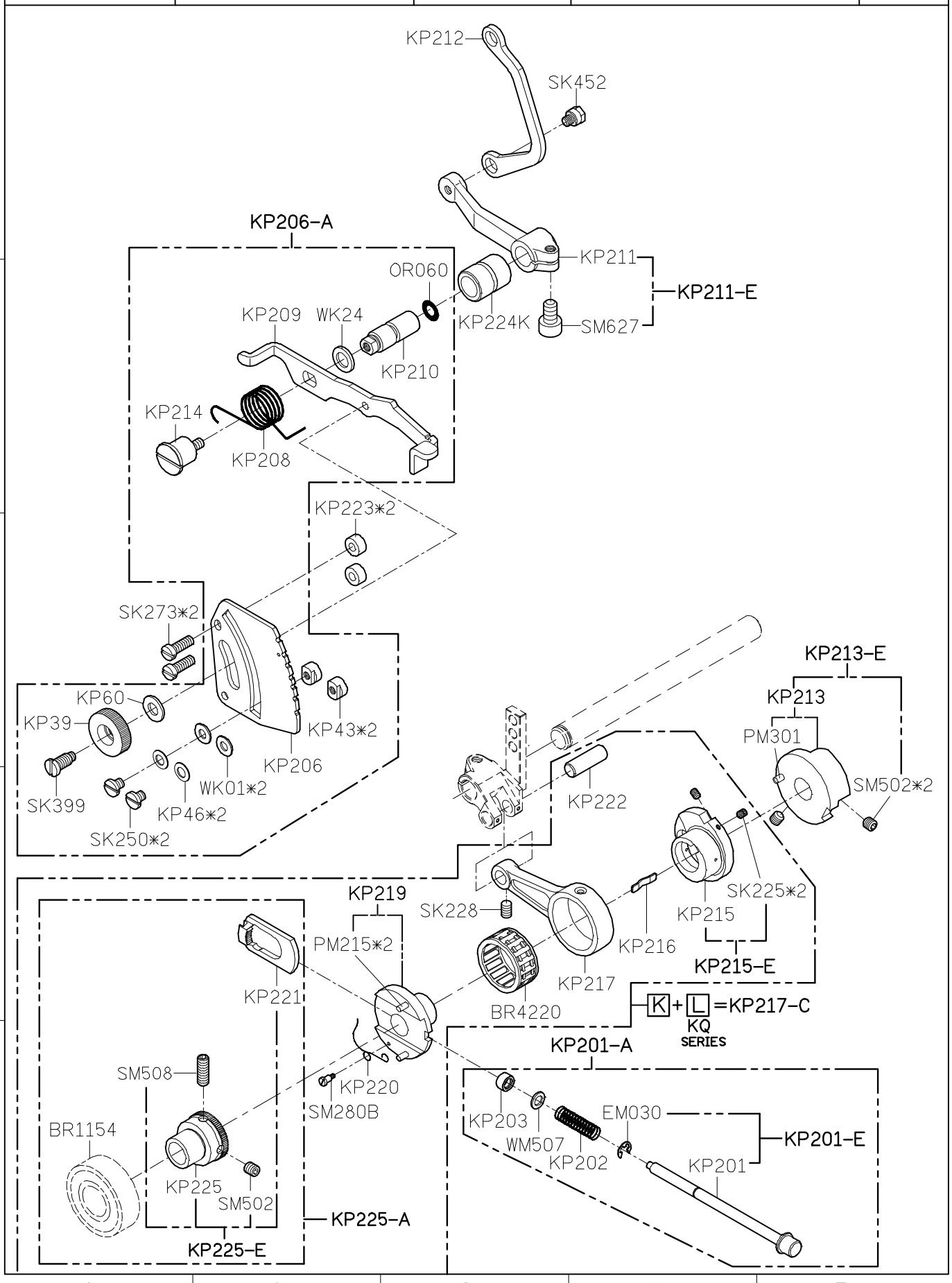

SIRUBA PARTS LIST	Series	Parts Group	Subclass / Remark	Page
	700K/700KD 988/988D	KQ		1/1
				Date
				2012/12/19

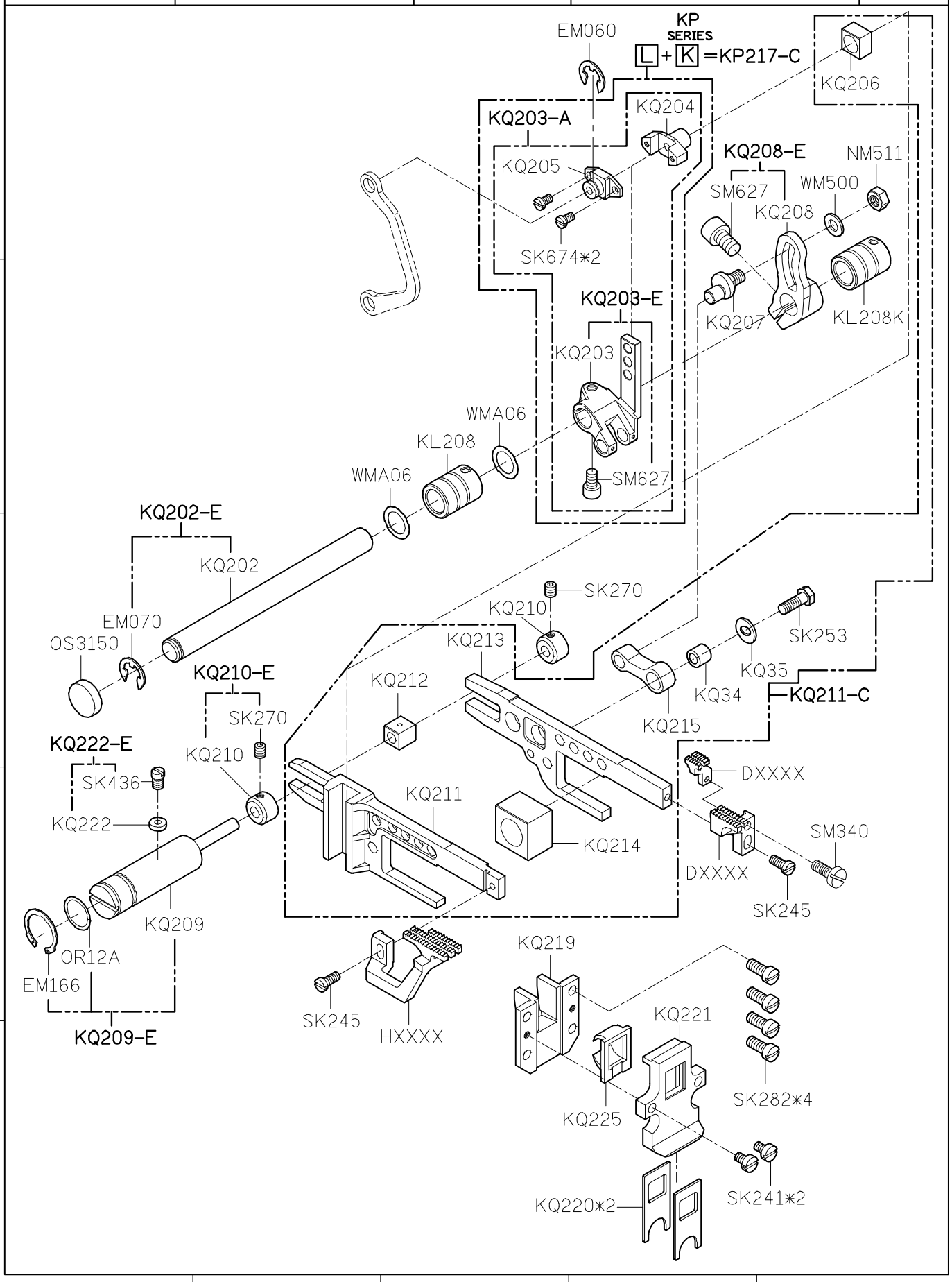

SIRUBA PARTS LIST	Series	Parts Group	Subclass / Remark	Page
	700K/700KD 988/988D	KR		1/1
				Date
				2012/12/19

MODEL	#3/#4	#5/#6	#5 X2
PARTS NO	KR202	KR218	KR218
	KR202-E	KR218-E	KR218-E
	KR206	KR221	KR221
	KR206-A	KR221-A	KR221-A1
	KR209	KR219	KR223
	KR209-A	KR219-A	KR223-A

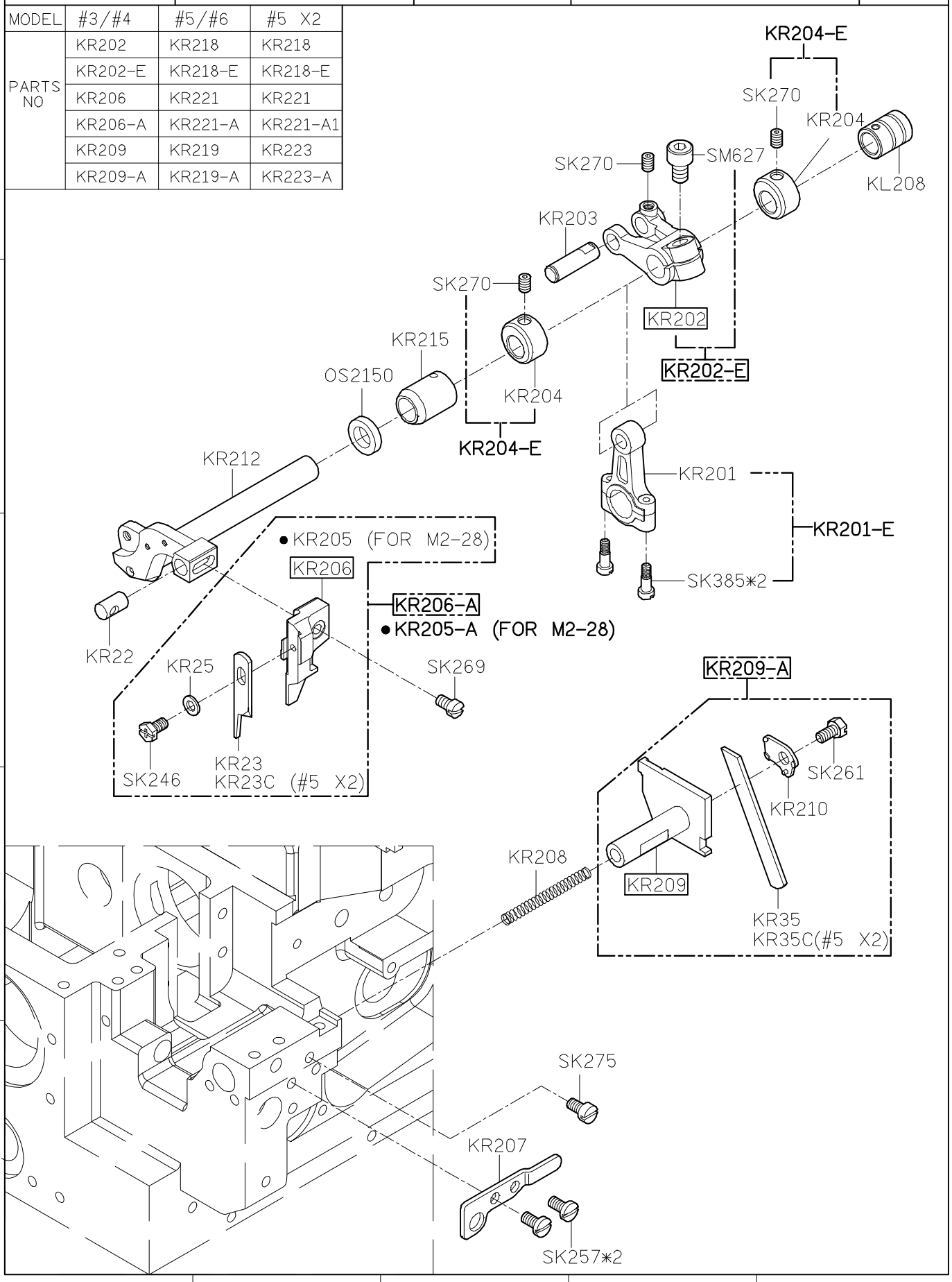

SiRUBA PARTS LIST	Series	Parts Group	Subclass / Remark	Page
	700K/700KD 988/988D	KS		1/1
				Date
				2012/08/18

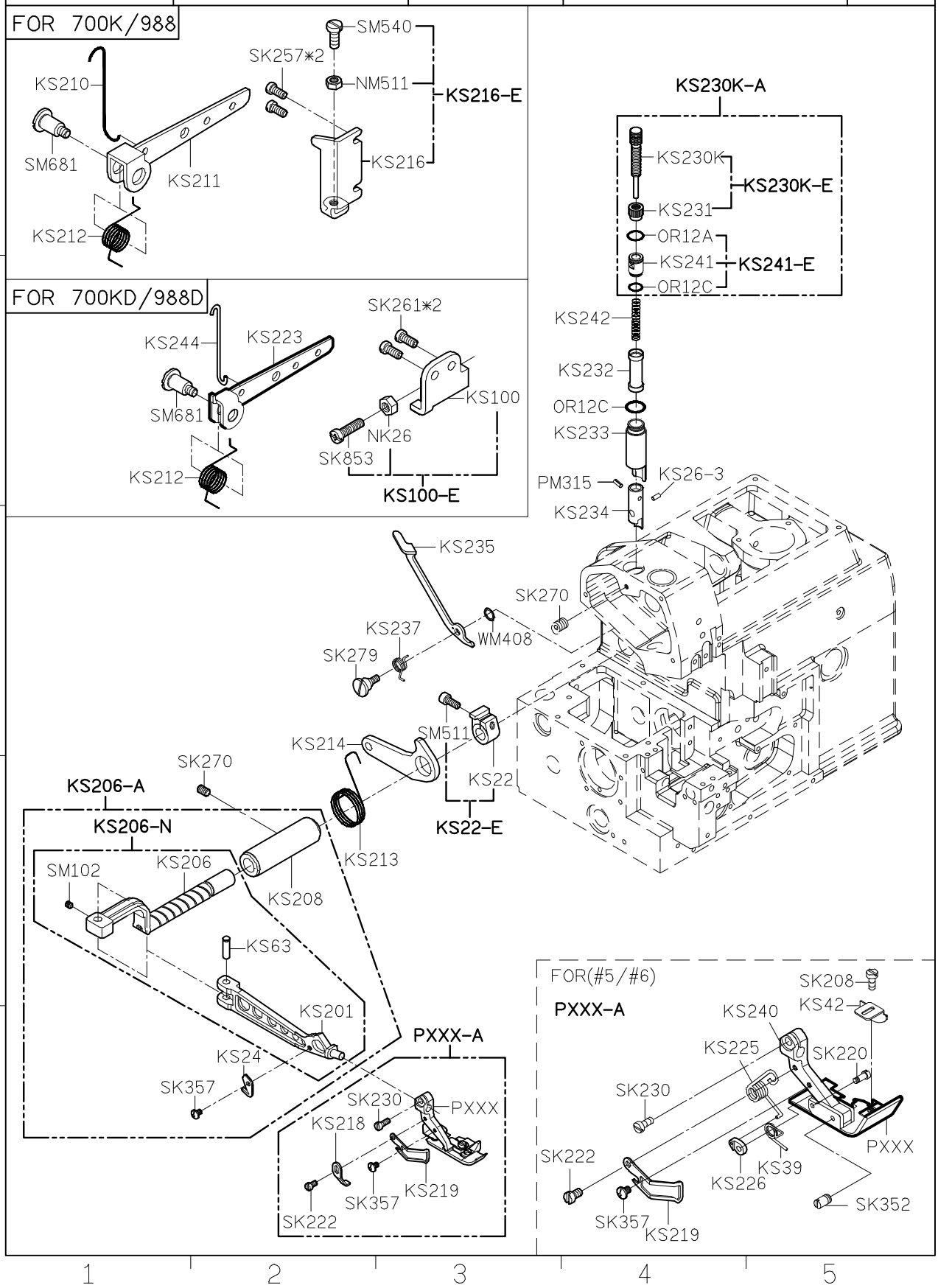

SiRUBA PARTS LIST	Series	Parts Group	Subclass / Remark	Page
	700K/700KD 988/988D	KT		1/1
				Date
				2012/08/18

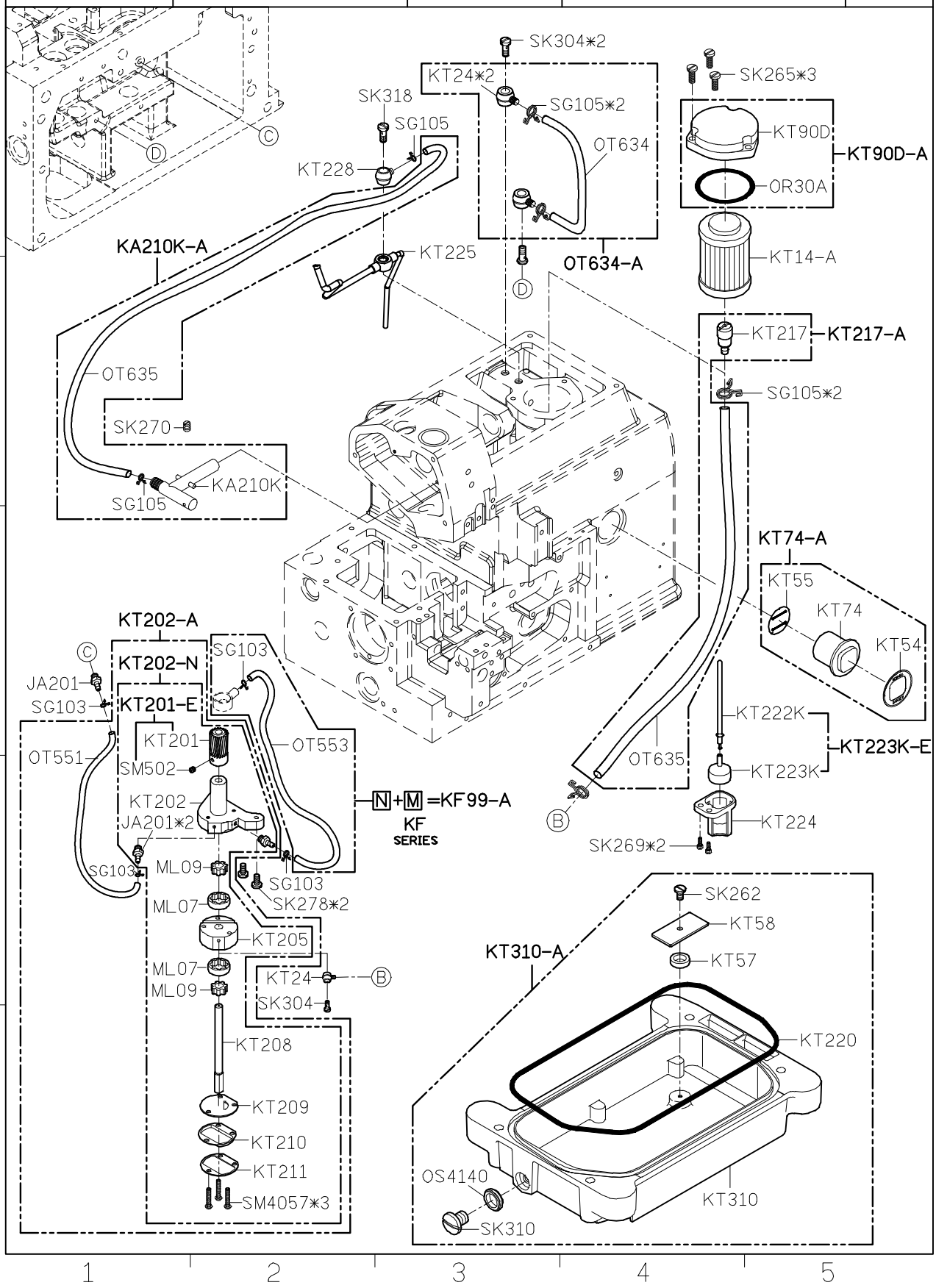

SiRUBA PARTS LIST	Series	Parts Group	Subclass / Remark	Page
	700K/700KD 988/988D	KU		1/1
				Date
				2012/08/18

MODEL	#3/#4	#5/#6
PARTS NO	KU40	KU39
	KU220-4	KU220-5
	KU207	KU209
	KU206	KU211
	KU201-4	KU201-5
	SK277	SK437

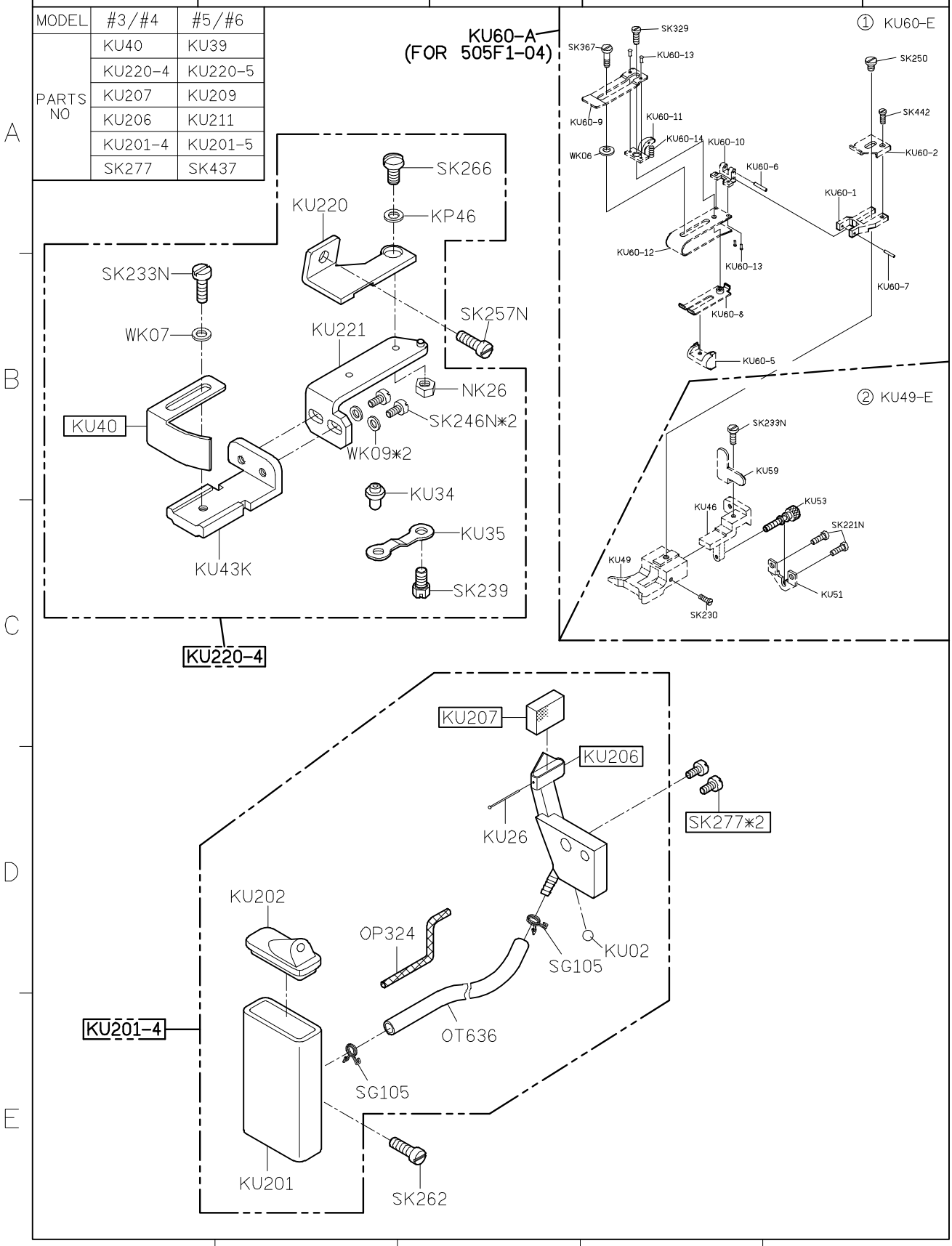

SiRUBA PARTS LIST	Series	Parts Group	Subclass / Remark	Page
	700K/700KD 988/988D	KW		1/4
				Date
				2012/08/18

KW40E-3

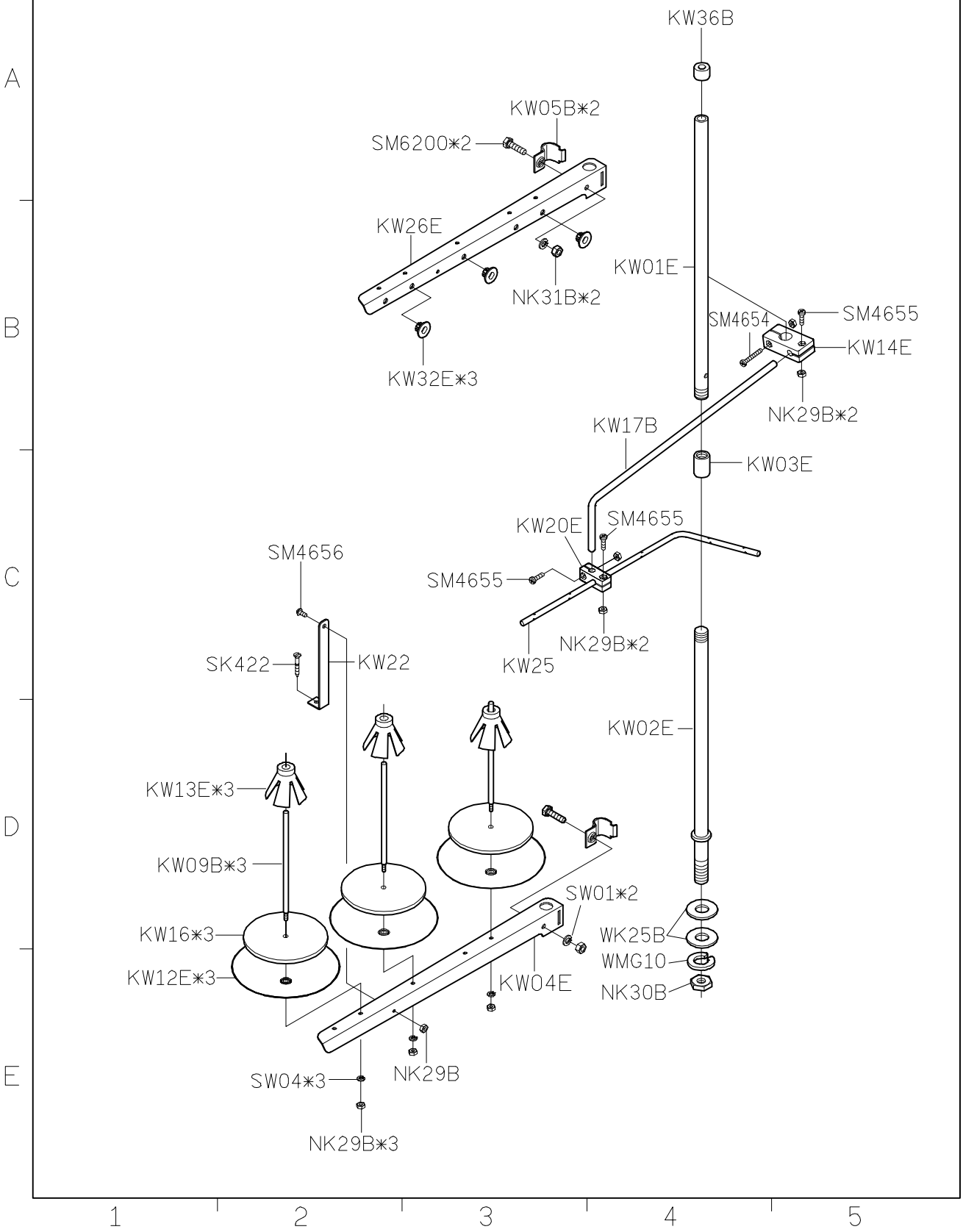

SIRUBA PARTS LIST	Series	Parts Group	Subclass / Remark	Page
	700K/700KD 988/988D	KW		2/4
				Date
				2012/08/18

KW40E-4

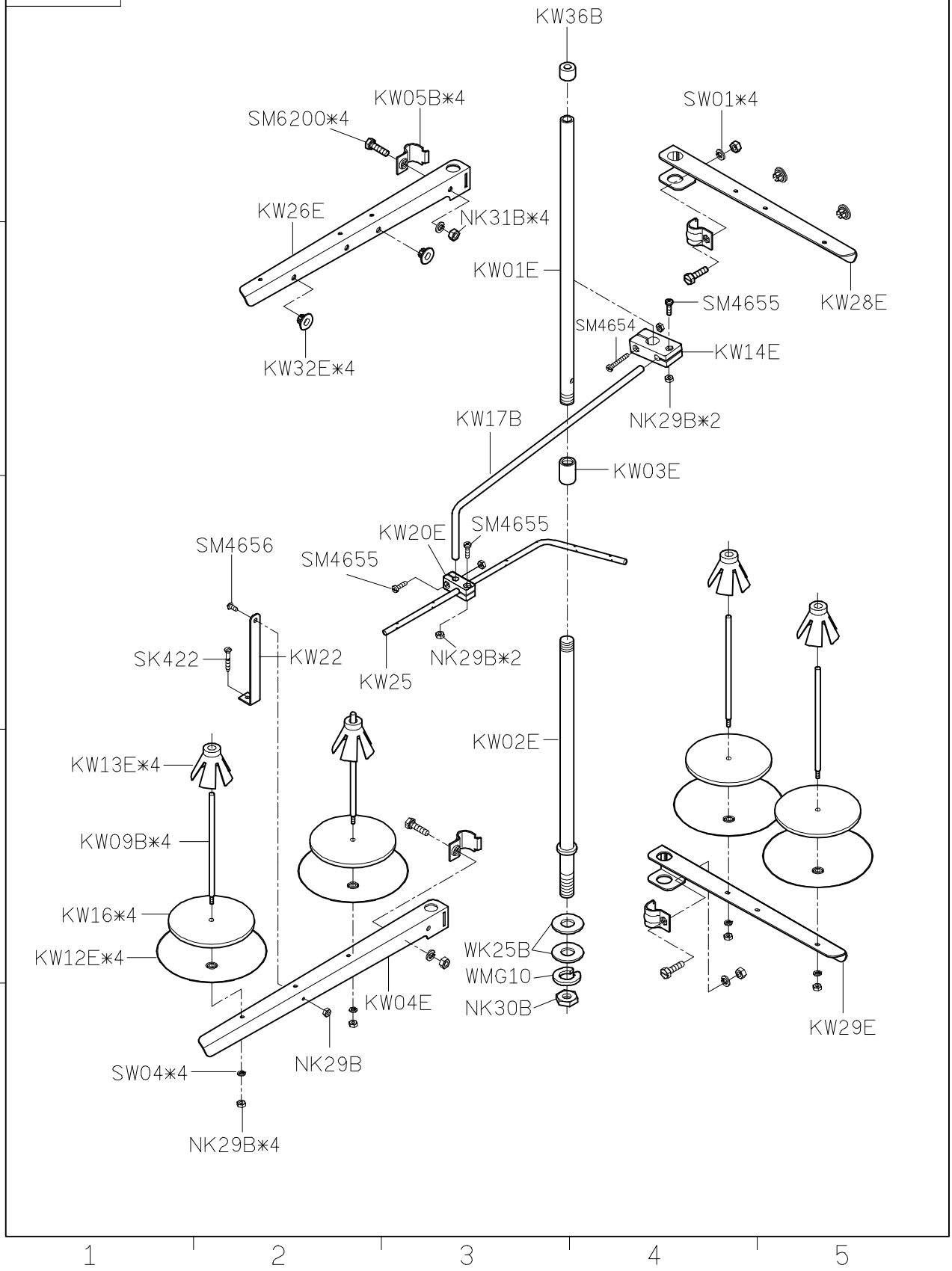

SiRUBA PARTS LIST	Series	Parts Group	Subclass / Remark	Page
	700K/700KD 988/988D	KW		3/4
				Date
				2012/08/18

KW40E-5

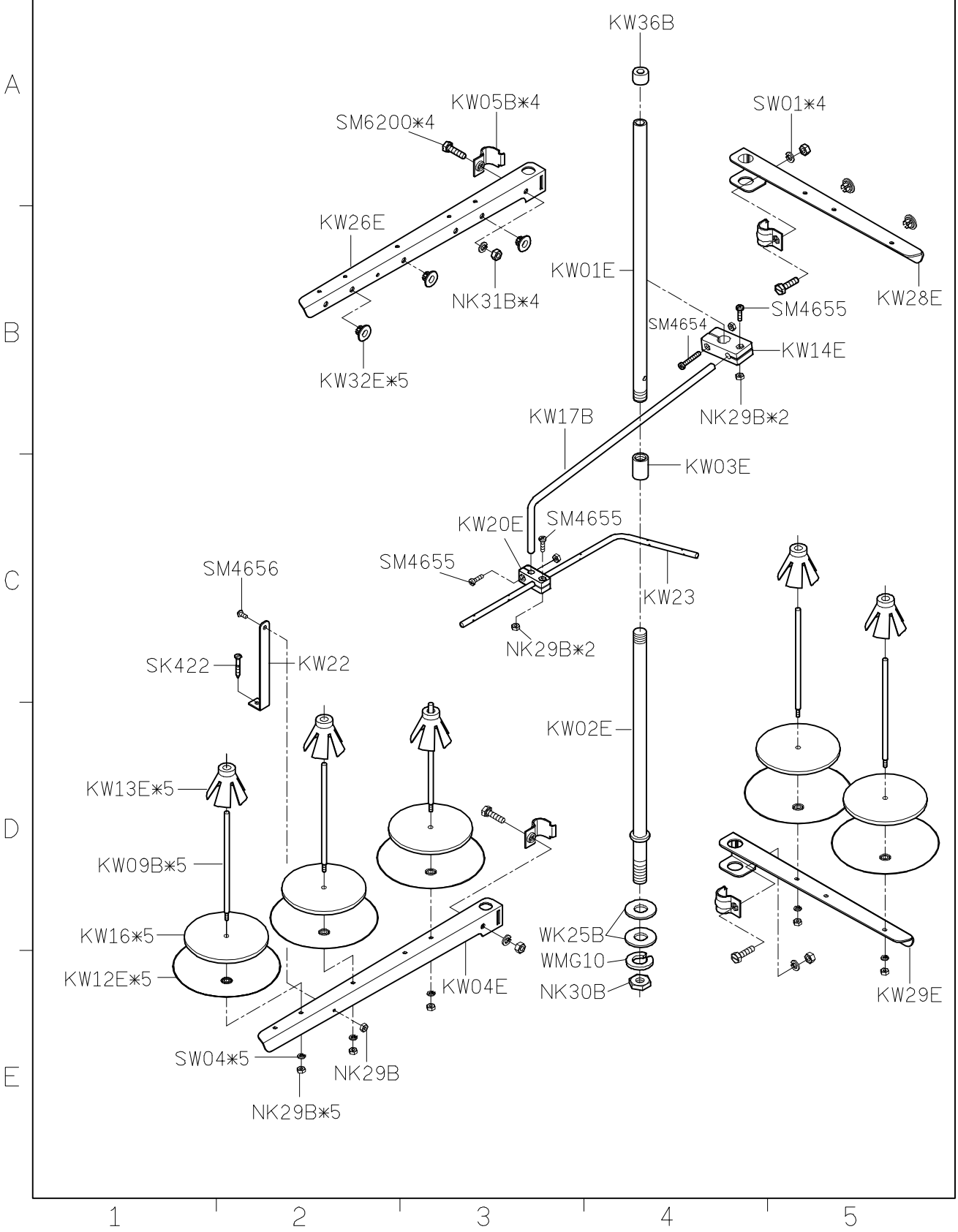

SIRUBA PARTS LIST	Series	Parts Group	Subclass / Remark	Page
	700K/700KD 988/988D	KW		4/4
				Date
				2012/08/18

KW40E-6

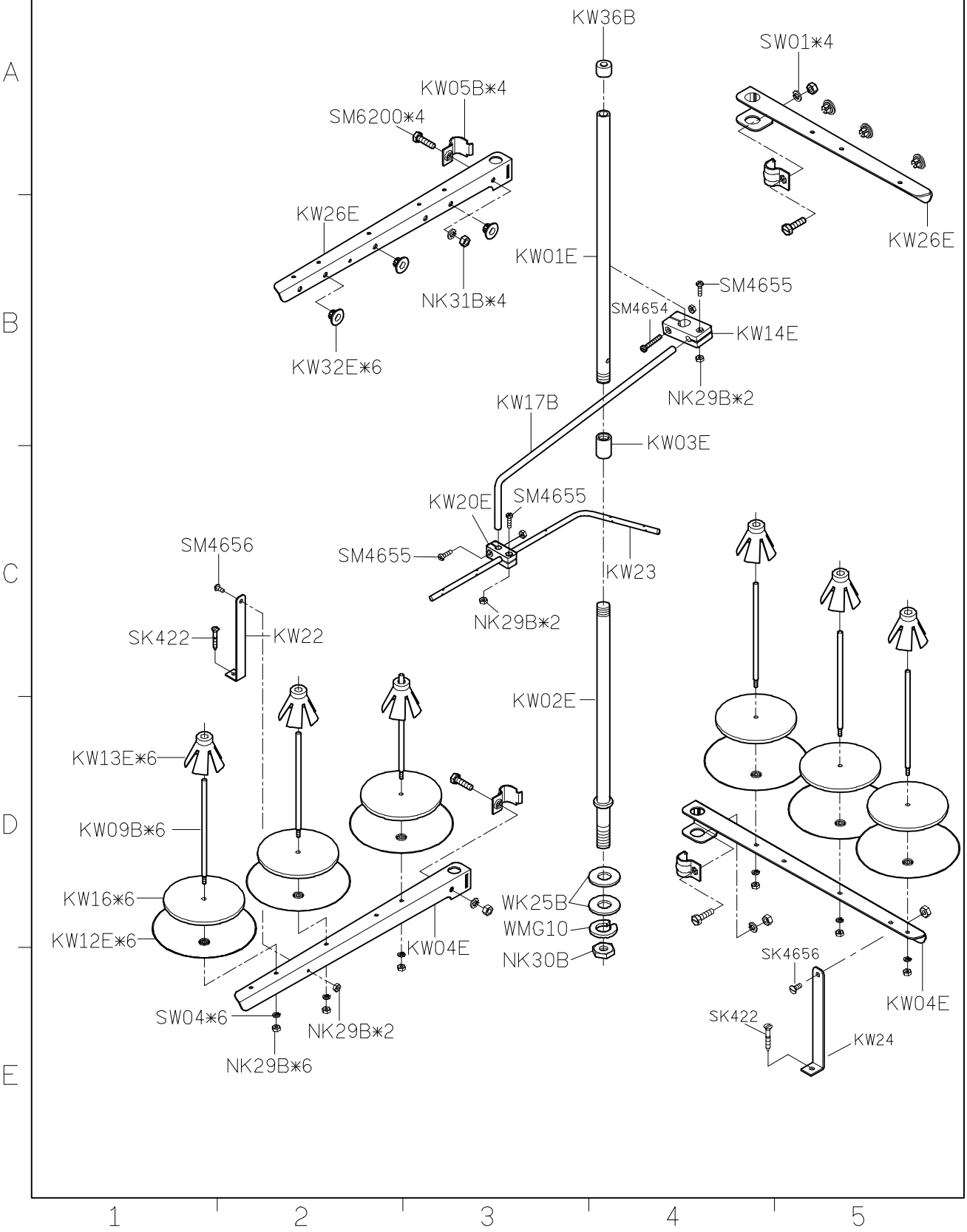

SiRUBA PARTS LIST	Series	Parts Group	Subclass Remark	Page
	700K/700KD 988/988D	KX		1/1
				Date
				2012/08/18

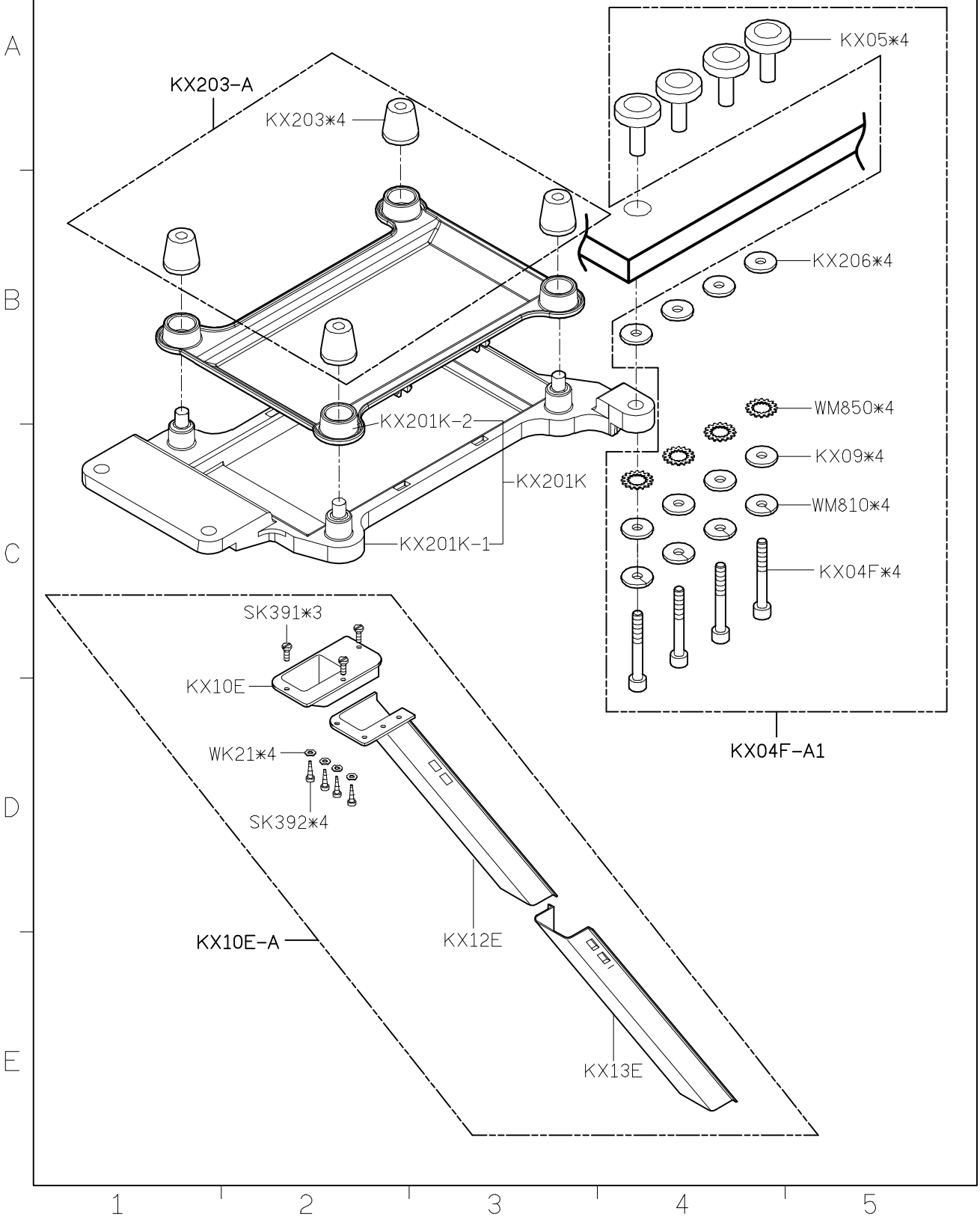

SiRUBA PARTS LIST	Series	Parts Group	Subclass Remark	Page
	700K/700KD 988/988D	KY	＊: Use for 700KD/988D	1/1
				Date
				2012/08/18

KY01-1
防塵罩

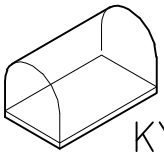

KY02F-A
油罐

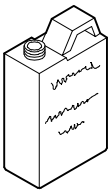

KY03
油壺

KY04
漏斗

KY05-A
油壺

KY23-A

KY23
內六角板手

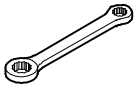

KY09
開口板手

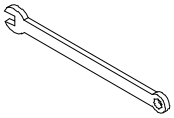

KY10-A

KY10
六角板手

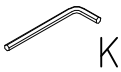

KY11
六角板手

KY12
六角板手

KY16-A

SK216
螺絲

KY14
內六角螺絲起子

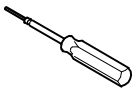

KY16
一字起子

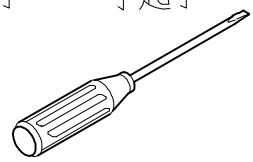

KY17
一字起子

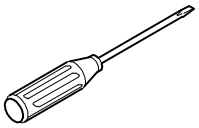

KY18
鑷子

KY19
穿線器

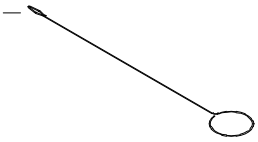

KY20D-A
腳踏板

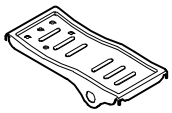

KY21-A/MY21-A
鉤子／鍊條

KY201
工具袋

KR35
下刀片

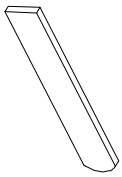

KT14-A
濾油器

KY30
針板紙

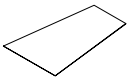

KZ03
乾燥濟

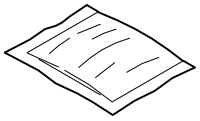

針＊5
車針

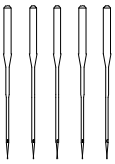

KZ08K
使用說明書

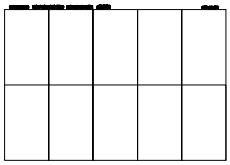

KZ08K-2
零件圖

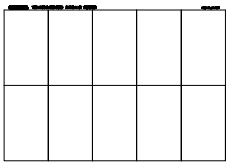

＊KC276-A
燈座電器組

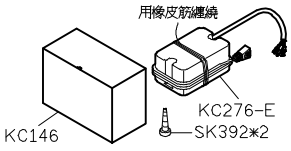

A B C D E

1 2 3 4 5

SIRUBA PARTS LIST	Series	Parts Group	Subclass Remark	Page
	700K/700KD 988/988D	KZ		1/1
				Date
				2012/11/27

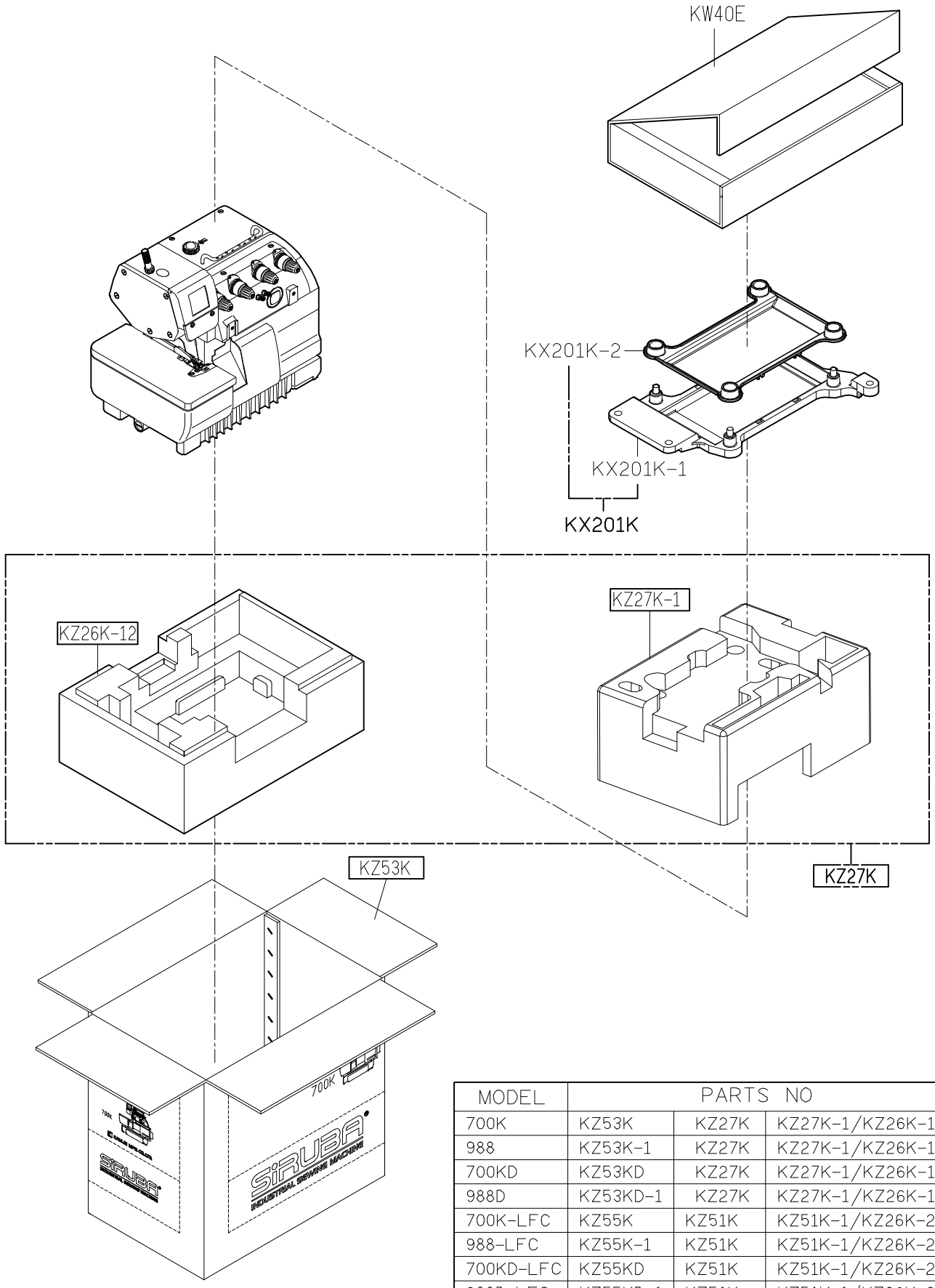

MODEL	PARTS NO		
700K	KZ53K	KZ27K	KZ27K-1/KZ26K-12
988	KZ53K-1	KZ27K	KZ27K-1/KZ26K-12
700KD	KZ53KD	KZ27K	KZ27K-1/KZ26K-12
988D	KZ53KD-1	KZ27K	KZ27K-1/KZ26K-12
700K-LFC	KZ55K	KZ51K	KZ51K-1/KZ26K-2
988-LFC	KZ55K-1	KZ51K	KZ51K-1/KZ26K-2
700KD-LFC	KZ55KD	KZ51K	KZ51K-1/KZ26K-2
988D-LFC	KZ55KD-1	KZ51K	KZ51K-1/KZ26K-2

SIRUBA PARTS LIST	Series	Parts Group	Subclass / Remark	Page
	700K/700KD 988/988D	LFA-K		1/3
				Date
				2012/12/18

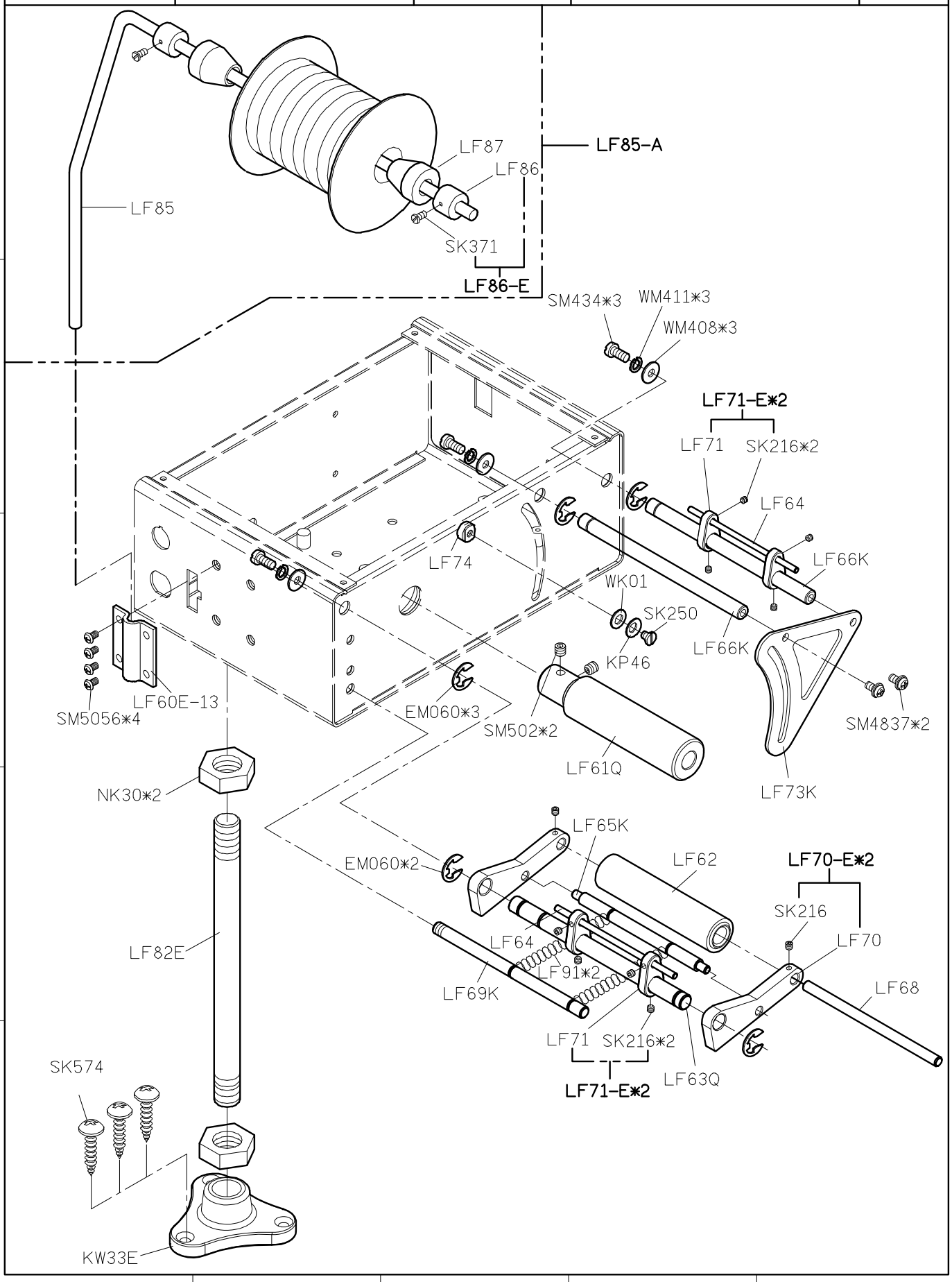

SIRUBA PARTS LIST	Series	Parts Group	Subclass / Remark	Page
	700K/700KD 988/988D	LFA-K	#: Use for 110V ● Use for LF-D6	2/3
				Date
				2012/12/18

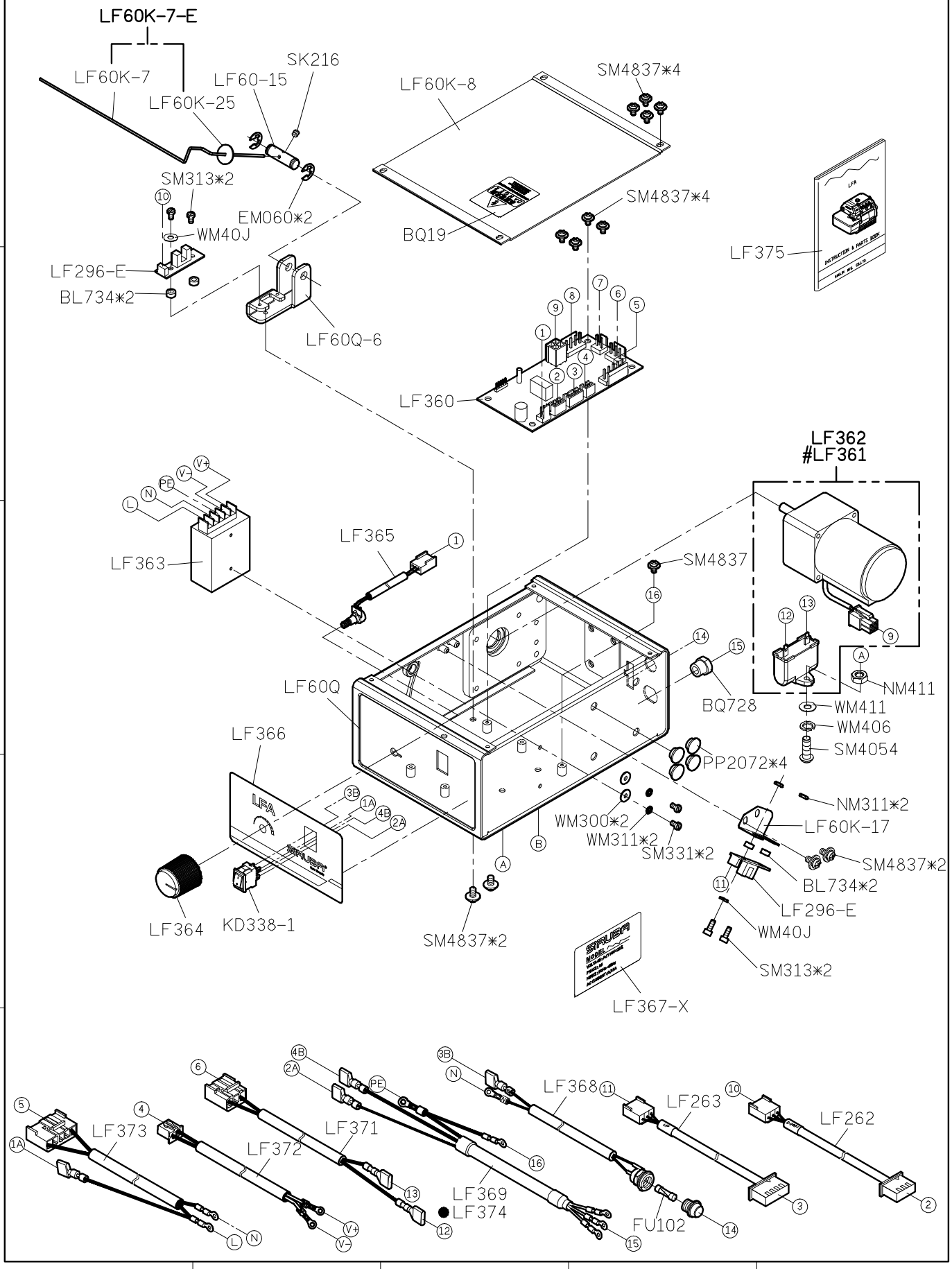

SIRUBA PARTS LIST	Series	Parts Group	Subclass / Remark	Page
	700K/700KD 988/988D	LFA-K		3/3
				Date
				2012/12/18

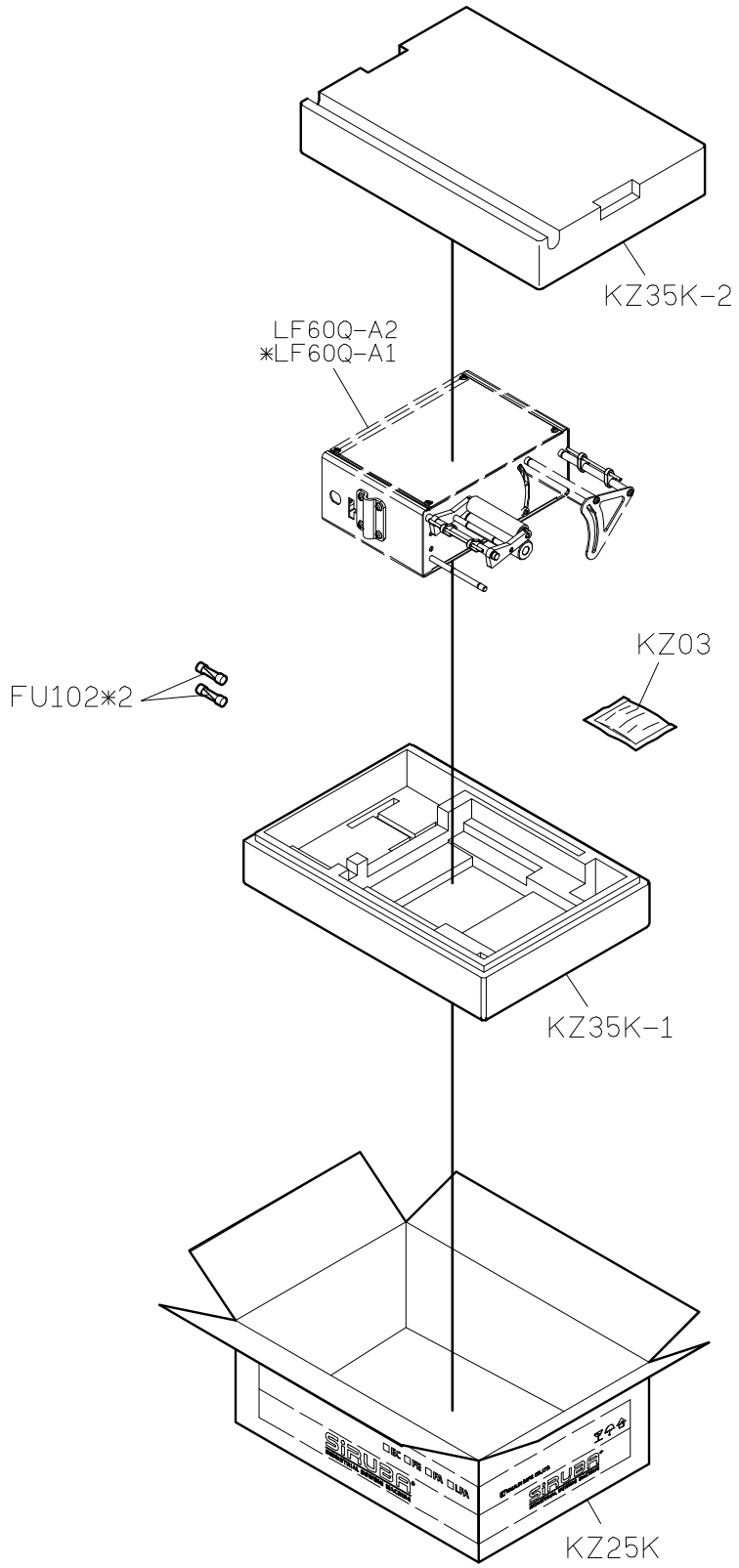

SIRUBA PARTS LIST	Series	Parts Group	Subclass / Remark	Page
	700K/700KD 988/988D		#:Use for 110V	Date 2012/12/18

LF290-A2(220V)
#LF290-A1(110V)

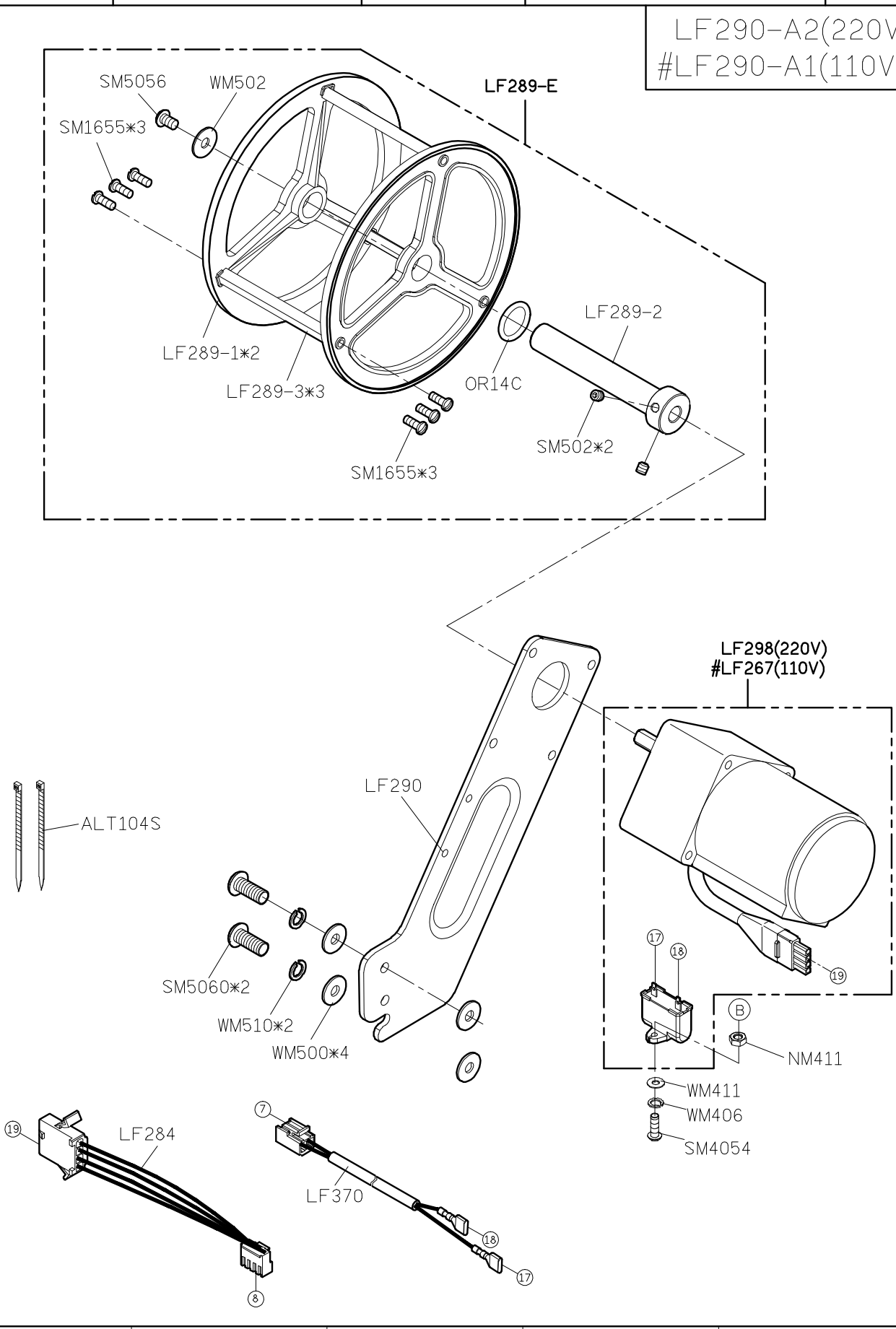

SIRUBA PARTS LIST	Series	Parts Group	Subclass / Remark	Page
	700K/700KD 988/988D	LFC-3		1/1
				Date
				2012/12/17

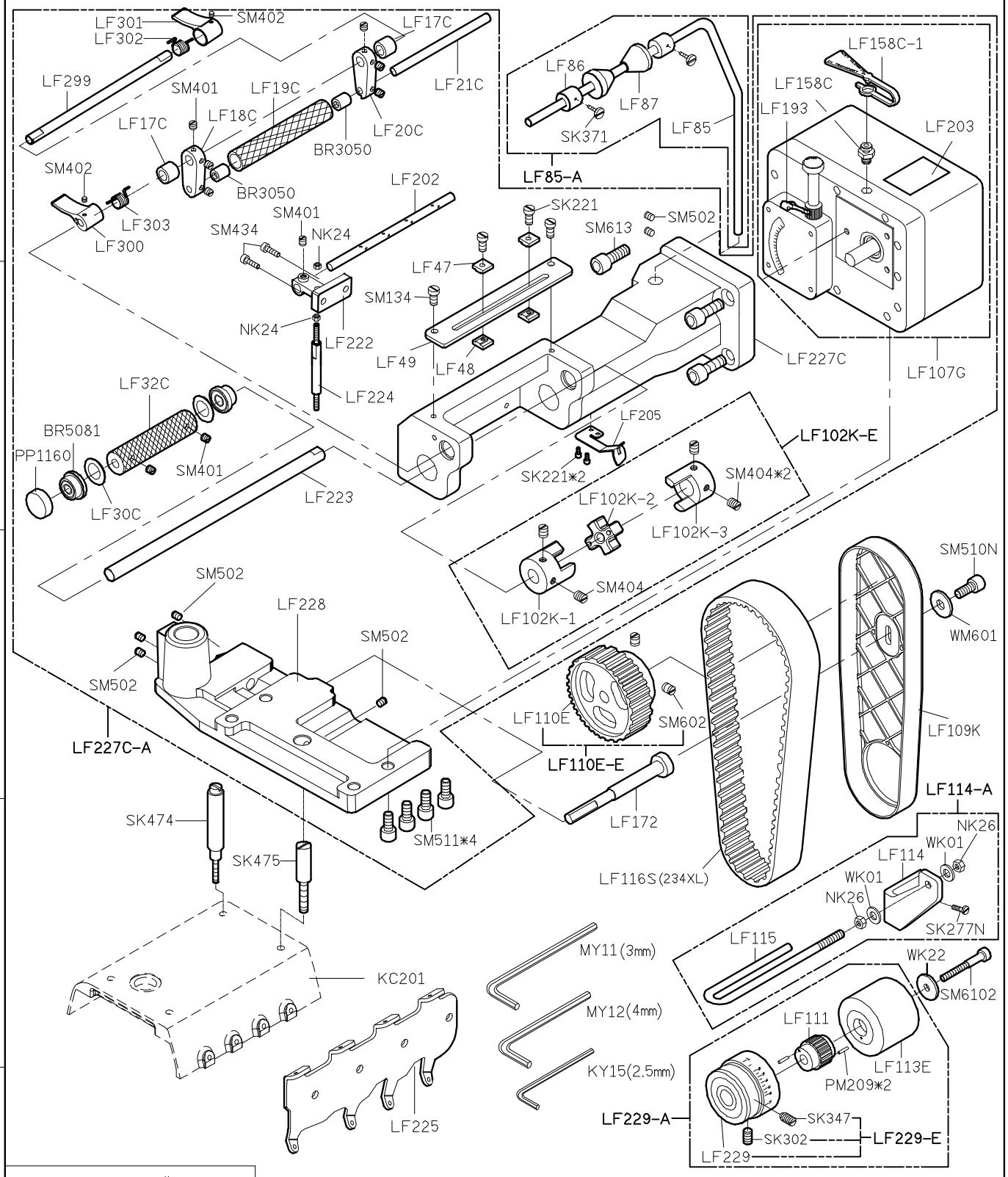

SIRUBA PARTS LIST	Series	Parts Group	Subclass / Remark	Page
	700K/700KD 988/988D	LFR-K	LFRK-R1 Use for Single Phase AC 110V LFRK-R2 Use for Single Phase AC 220V	1/4
				Date
				2012/12/18

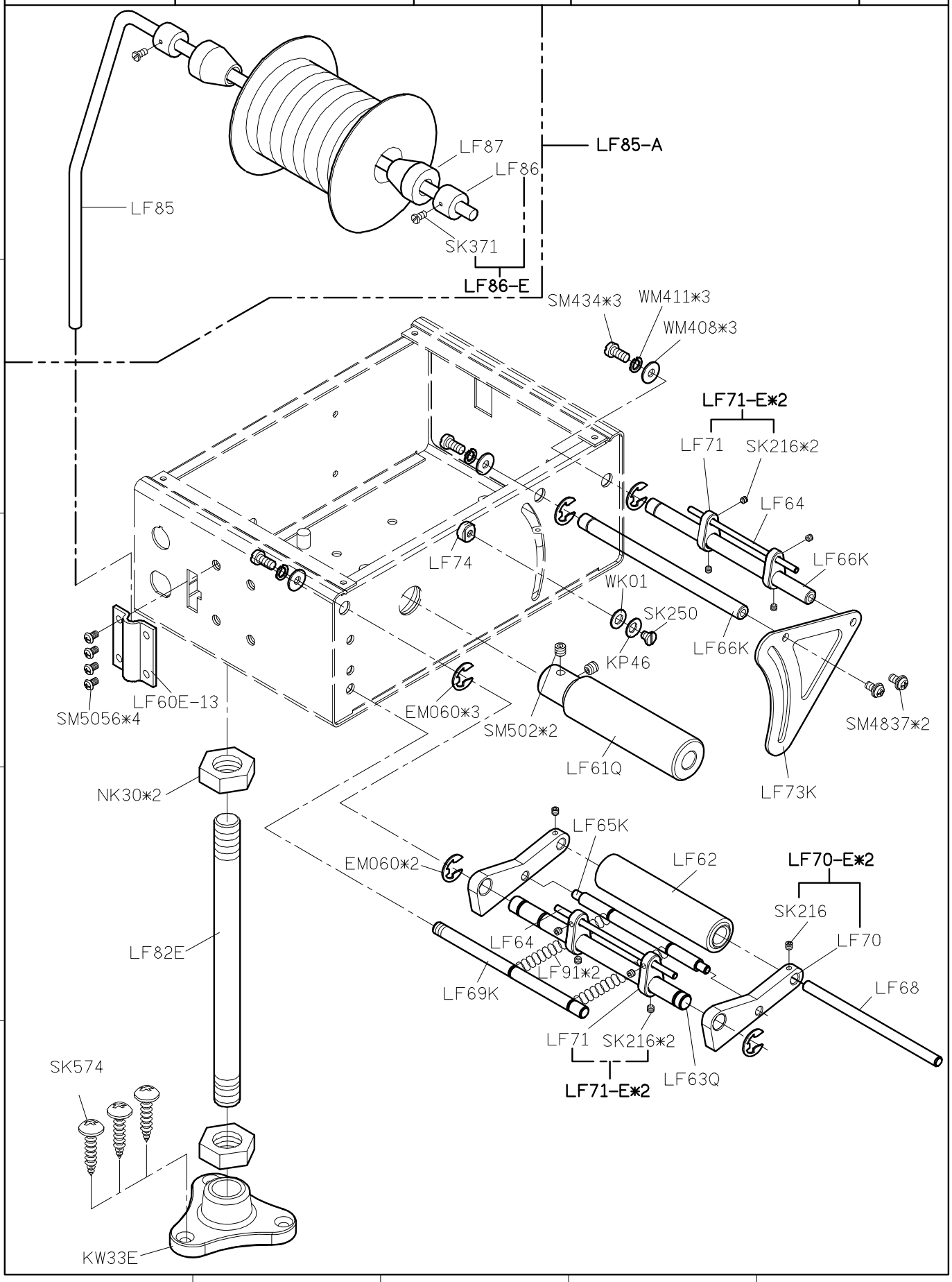

SIRUBA PARTS LIST	Series	Parts Group	Subclass / Remark	Page
	700K/700KD 988/988D	LFR-K	#: Use for 110V ● Use for LF-D6	2/4
				Date
				2012/12/18

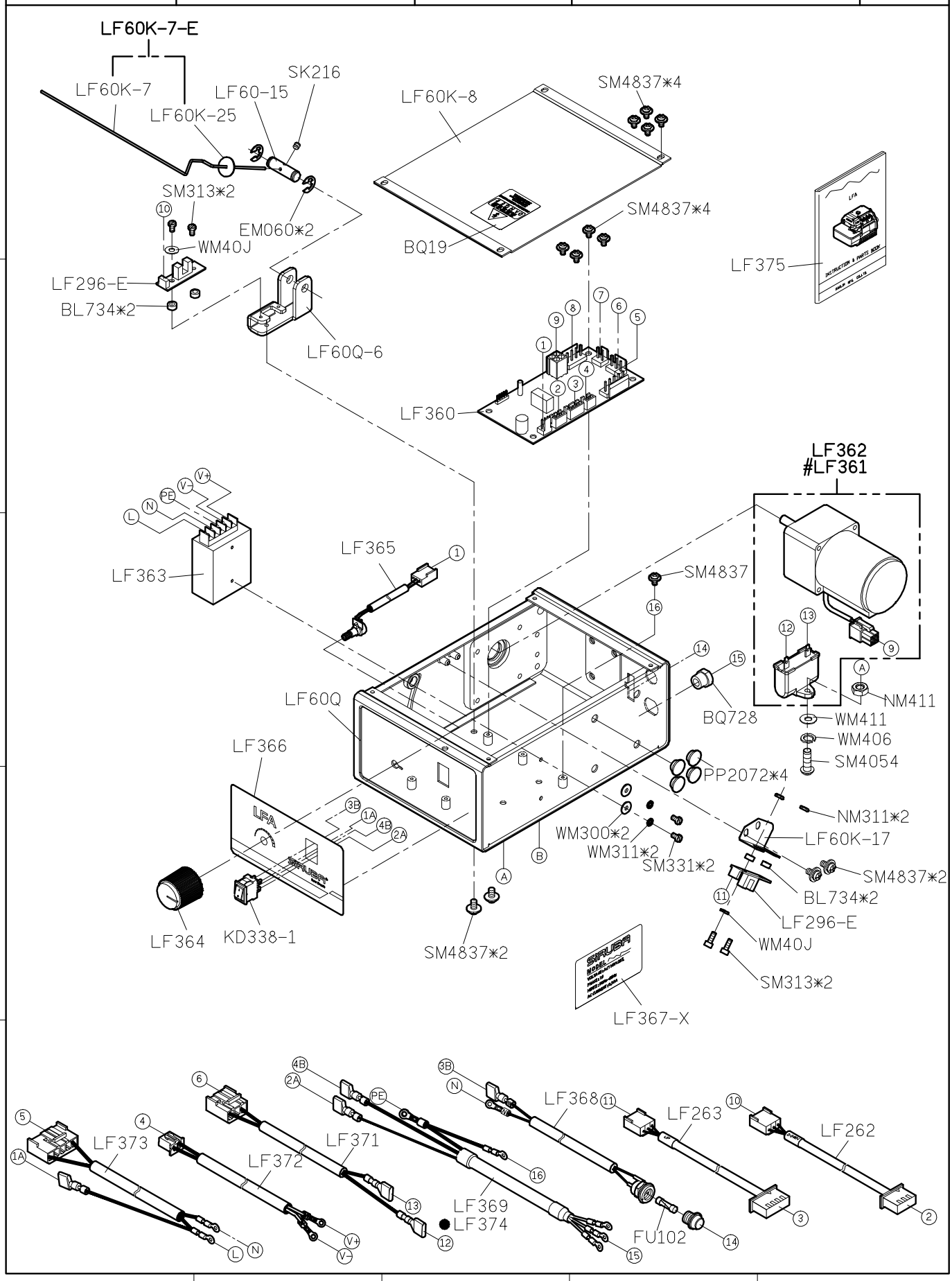

SIRUBA PARTS LIST	Series	Parts Group	Subclass / Remark	Page
	700K/700KD 988/988D	LFR-K	#:Use for 110V	3/4
				Date
				2012/12/18

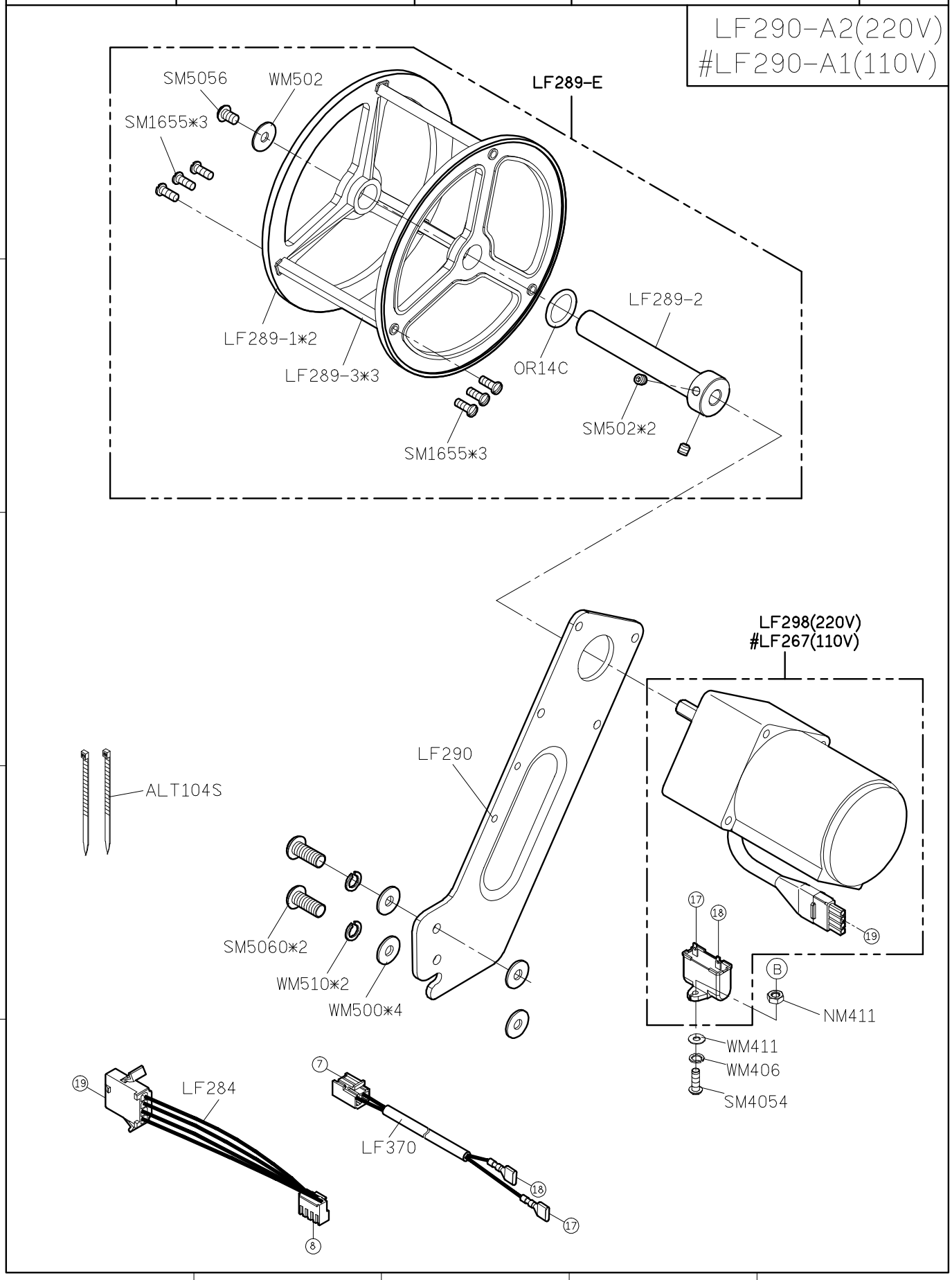

SIRUBA PARTS LIST	Series	Parts Group	Subclass / Remark	Page
	700K/700KD 988/988D	LFR-K	#:Use for 110V	4/4
				Date
				2012/12/18

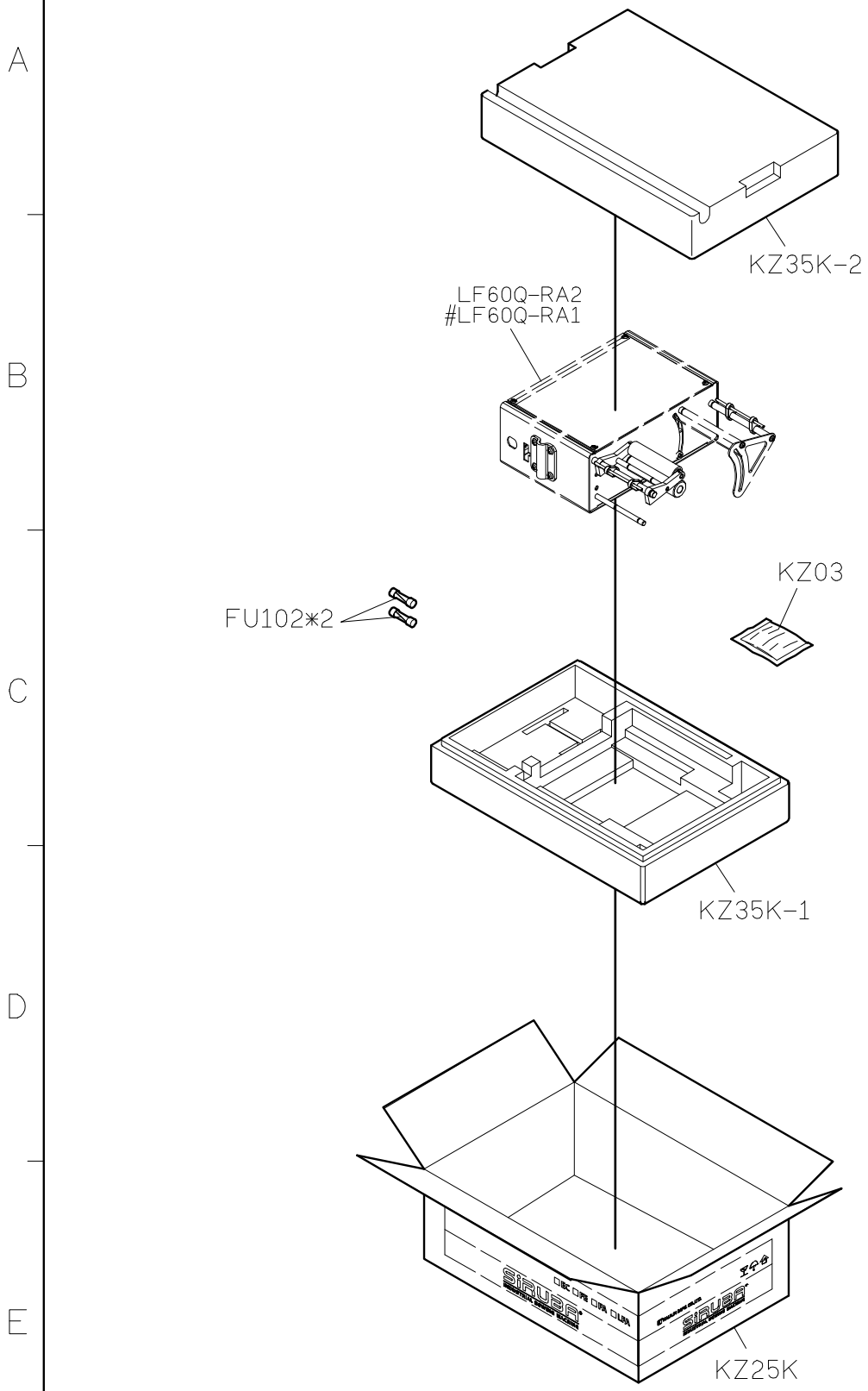

SIRUBA PARTS LIST	Series	Parts Group	Subclass / Remark	Page
	700K/700KD 988/988D	PS-K		1/1
				Date
				2012/12/18

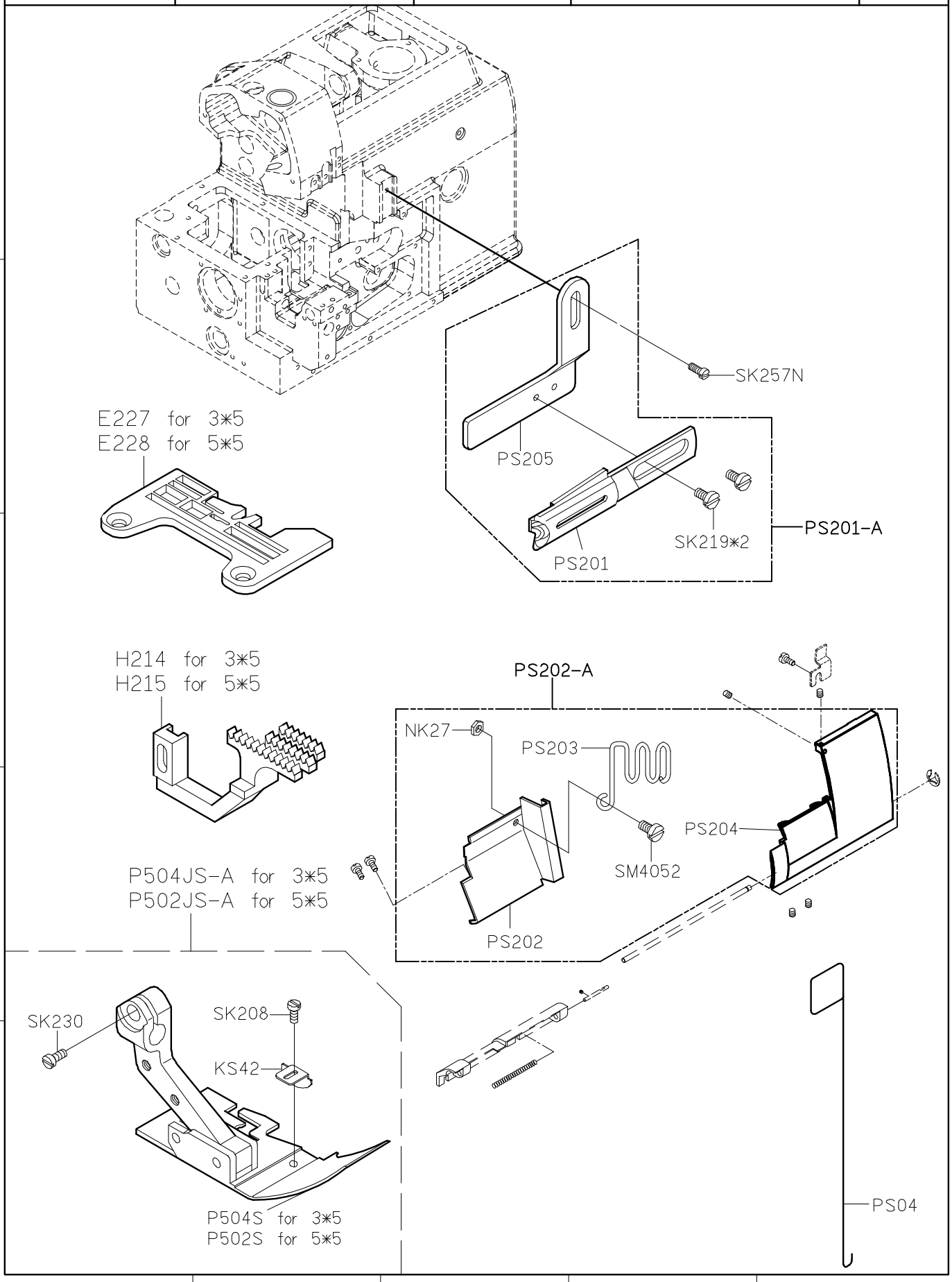

SIRUBA PARTS LIST	Series	Parts Group	Subclass / Remark	Page
	700K/700KD 988/988D	TA-K		1/1
				Date
				2012/12/18

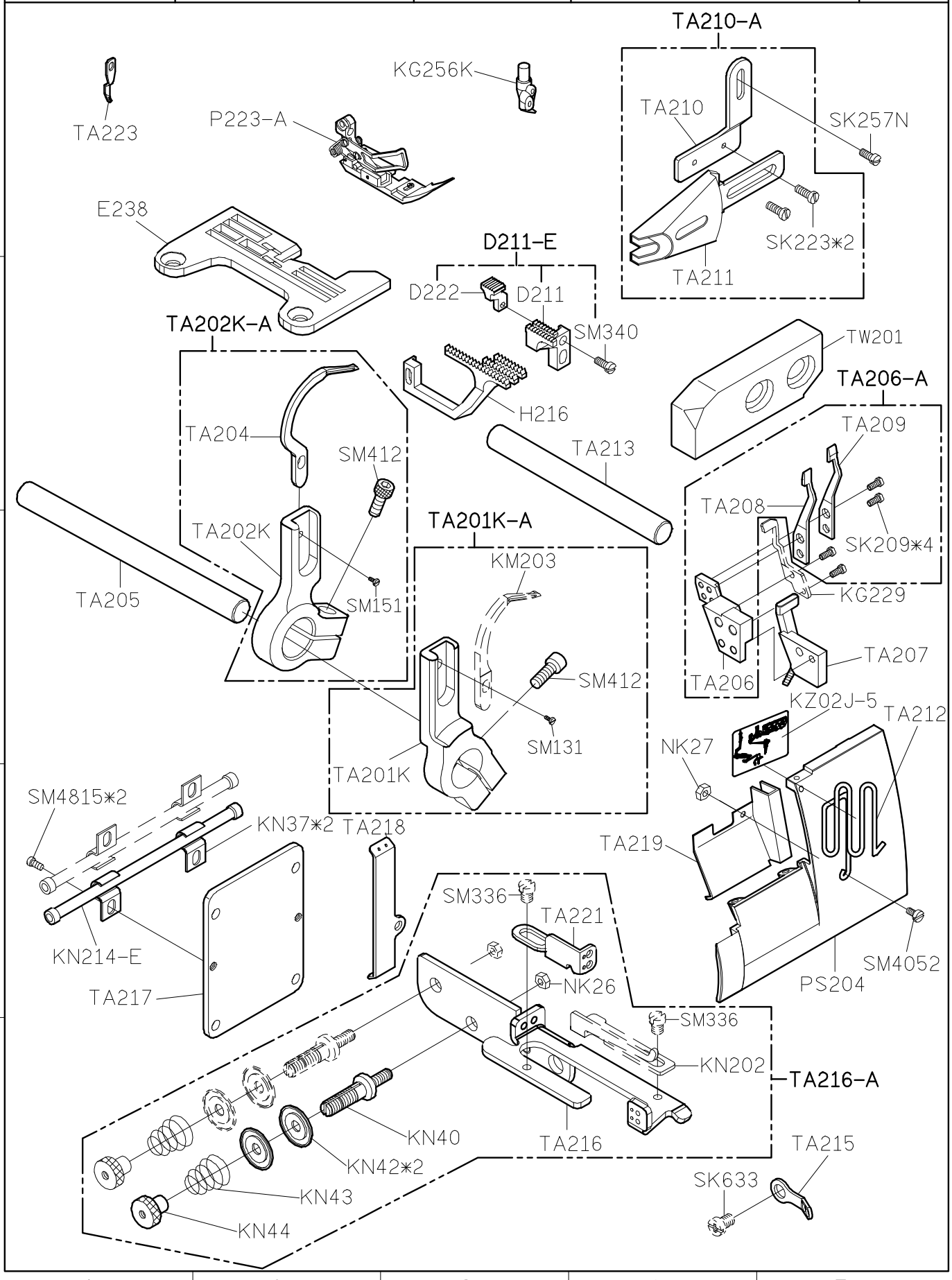

SIRUBA PARTS LIST	Series	Parts Group	Subclass / Remark	Page
	700K/700KD 988/988D	TBK	TBK-1 for 700K/988 TBKD-1 for 700KD/988D	1/1
				Date
				2012/12/18

MODEL	TBK-1(700K/988用)	TBKD-1(700KD/988D用)
TBK	TB201	TB201D
TABLE	700K-T2	700KD-T2

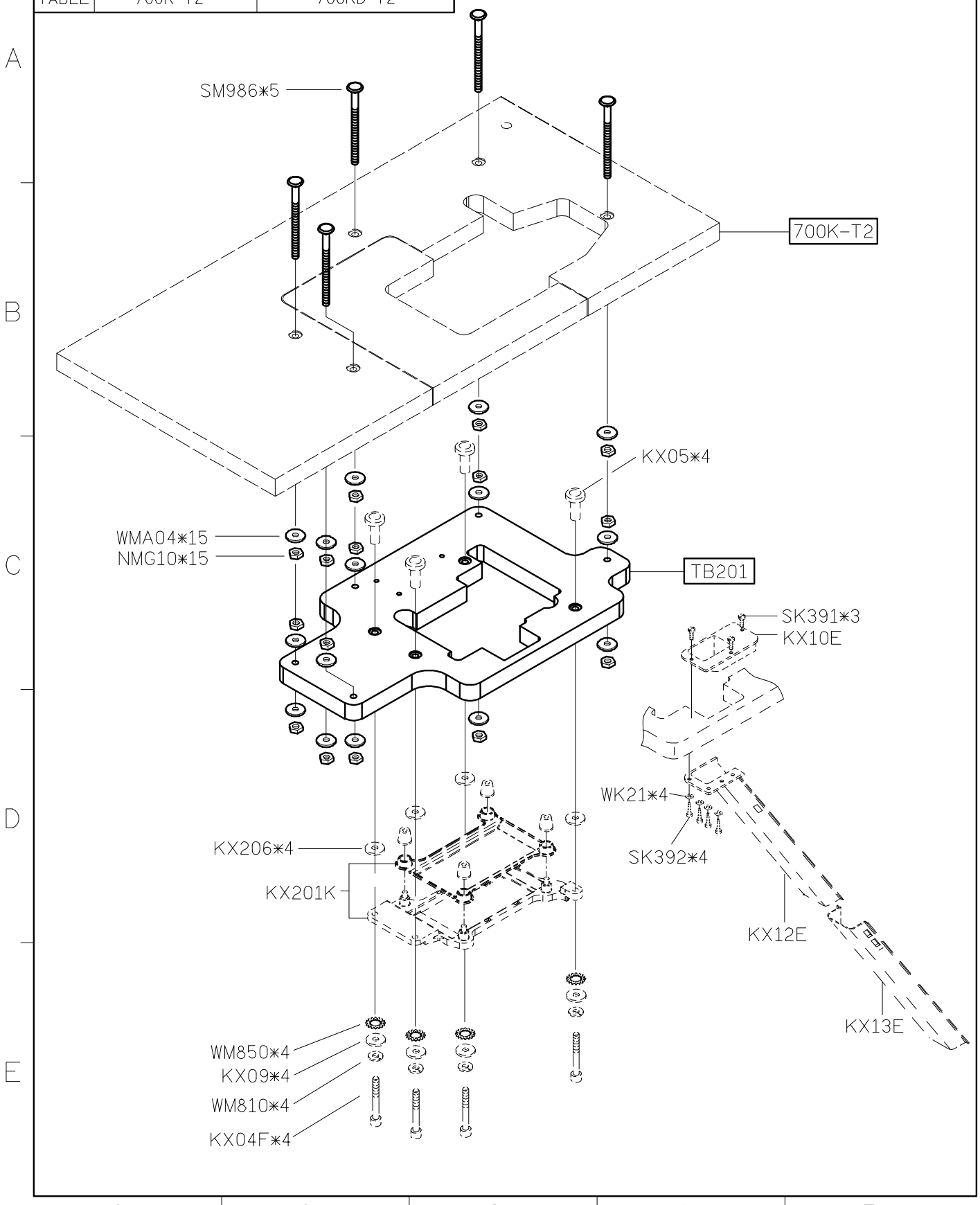

SIRUBA PARTS LIST	Series	Parts Group	Subclass / Remark	Page
	700K/700KD 988/988D	TG		1/1
				Date
				2012/12/18

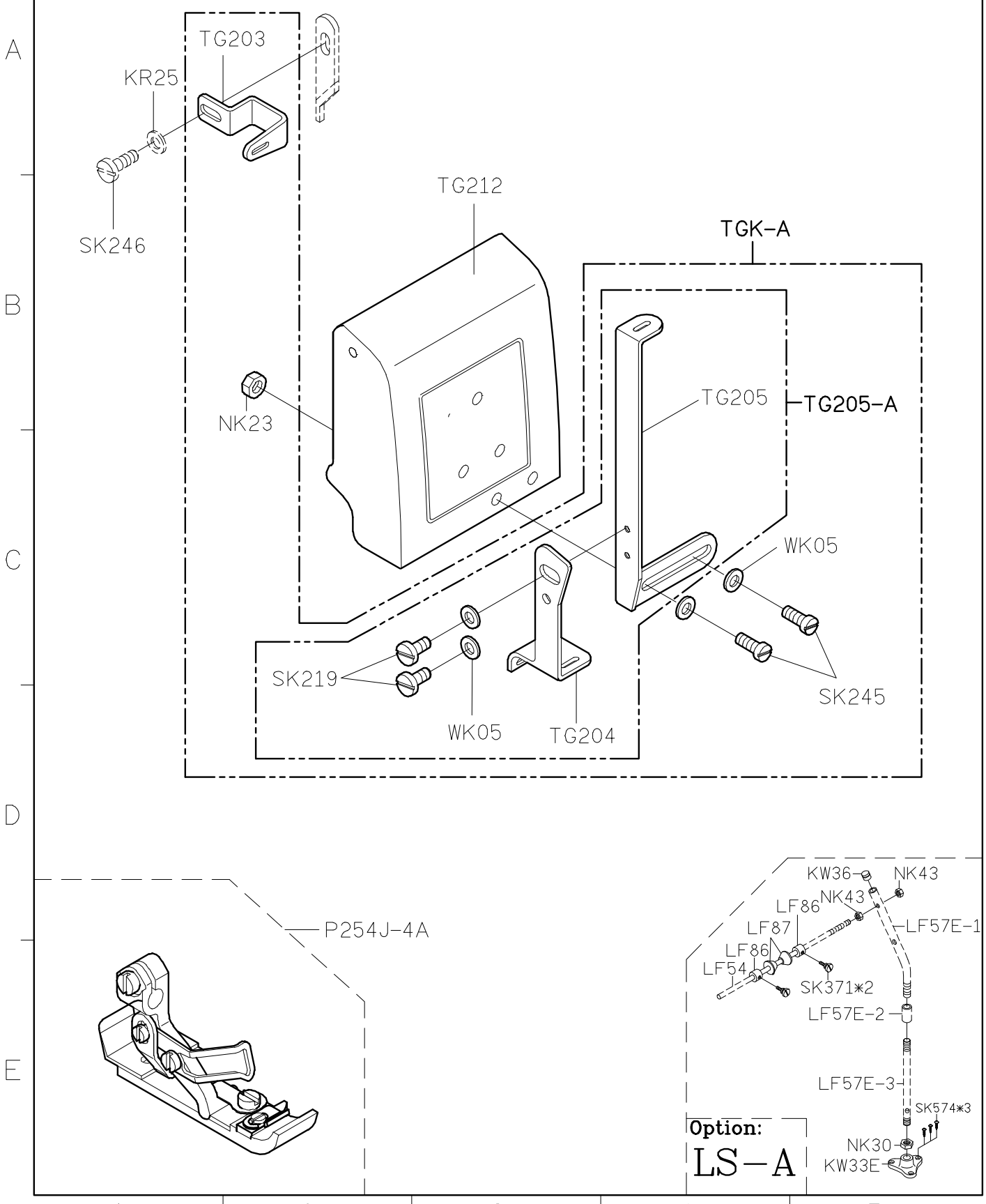

SIRUBA PARTS LIST	Series	Parts Group	Subclass / Remark	Page
	700K/700KD 988/988D	TR		1/1
				Date
				2012/12/18

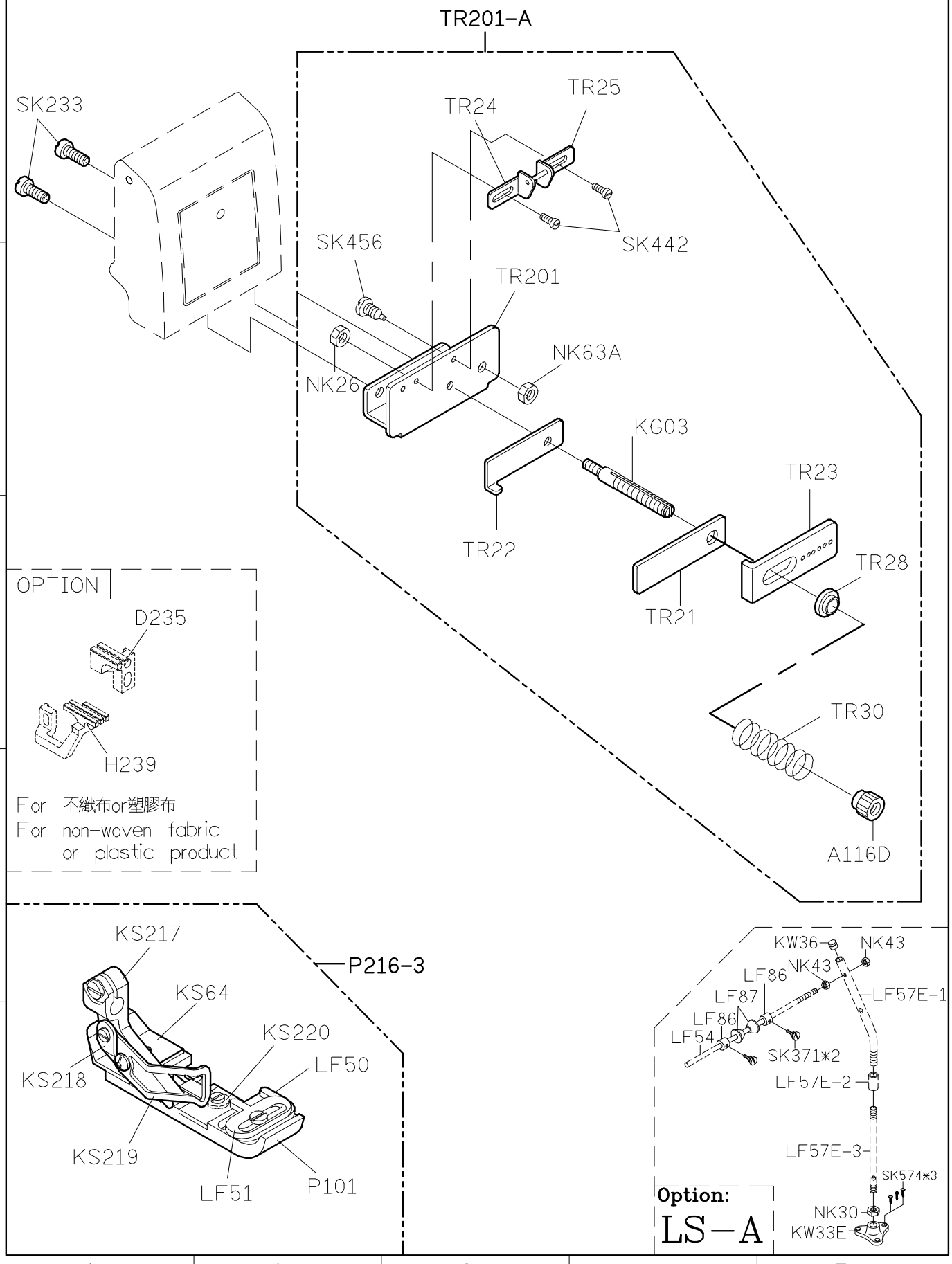

SIRUBA PARTS LIST	Series	Parts Group	Subclass / Remark	Page
	700K/700KD 988/988D	TW		1/1
				Date
				2012/12/18

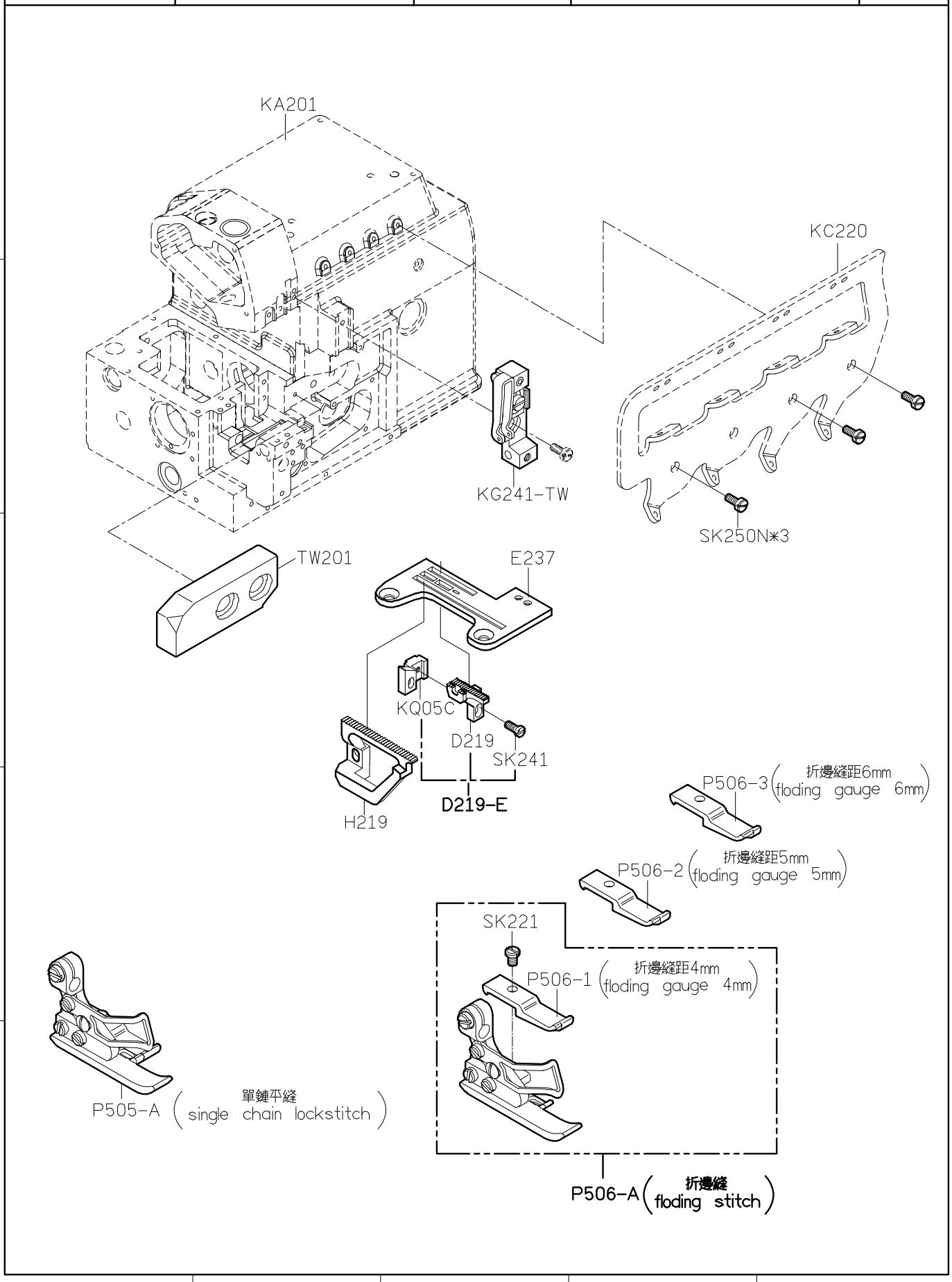

SIRUBA PARTS LIST	Series	Parts Group	Subclass / Remark	Page
	700K/700KD 988/988D	VT-K		1/1
				Date
				2012/12/18

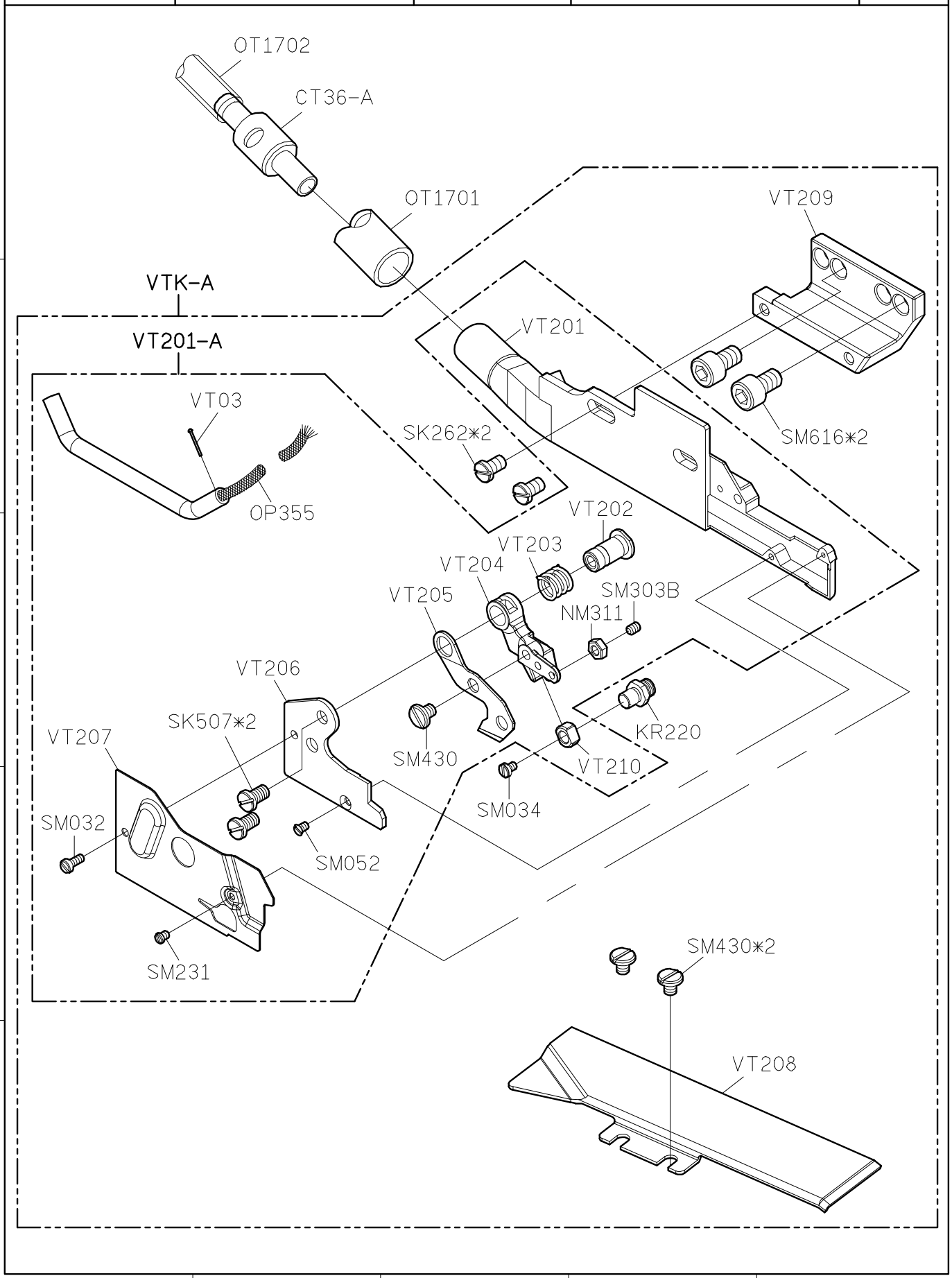

SIRUBA PARTS LIST	Series	Parts Group	Subclass / Remark	Page
	700K/700KD 988/988D	WR-K		1/1
				Date
				2012/12/18

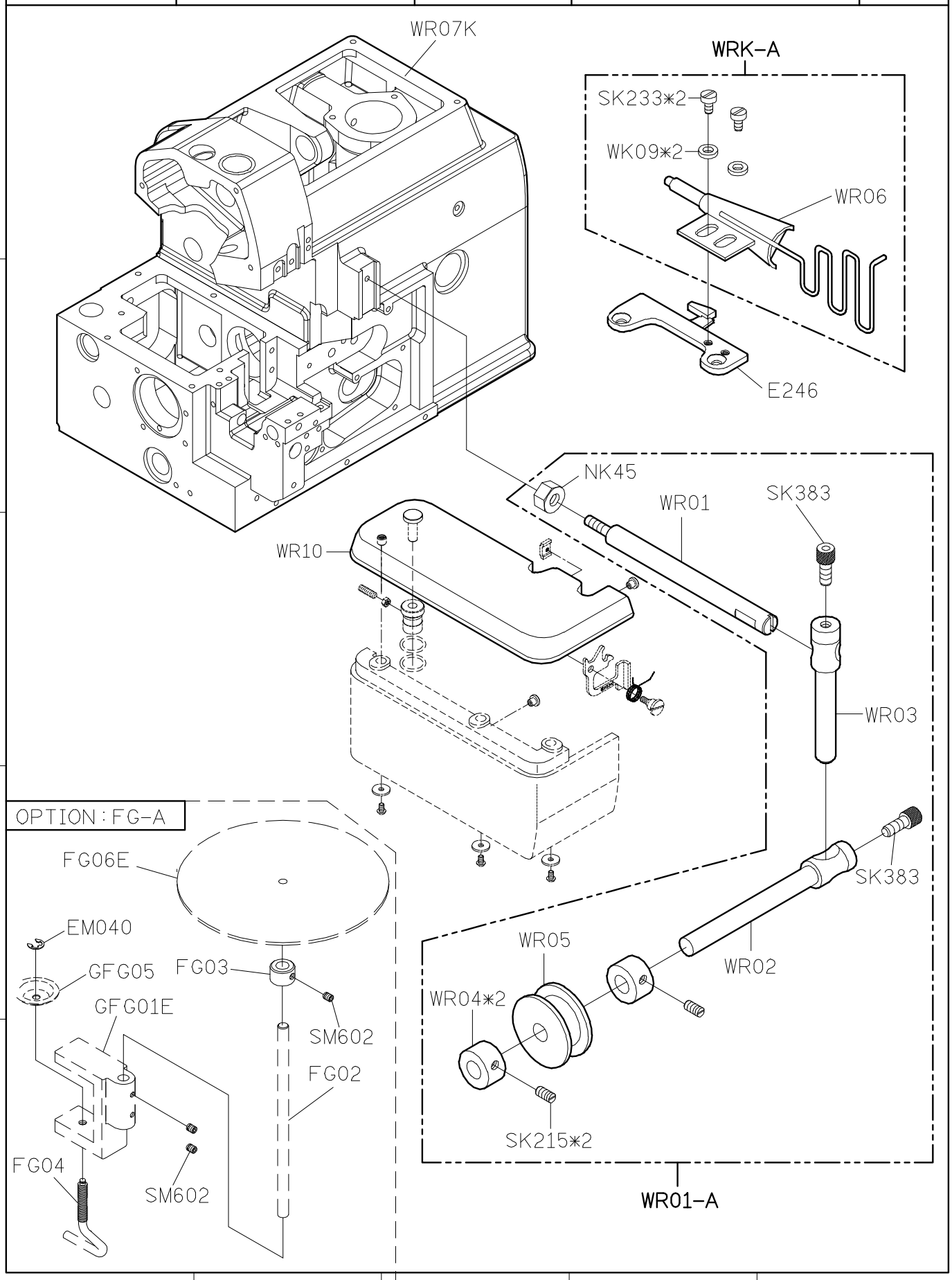

SiRUBA TABLE CUT - OUT	Series	Item Code	Subclass Remark	Mounting
	700K/988	TB201		Fully-submerged Fixed Table
				Date
				2012/12/22

單位/UNIT:mm
FOR 700K/988
所有尺寸公差/DIFFERENCE:±2
重量(W):4.25kg±5%
全封邊灰格紋光塑面台板/Plastic Table With All Sides Sealed With Gray Plaid

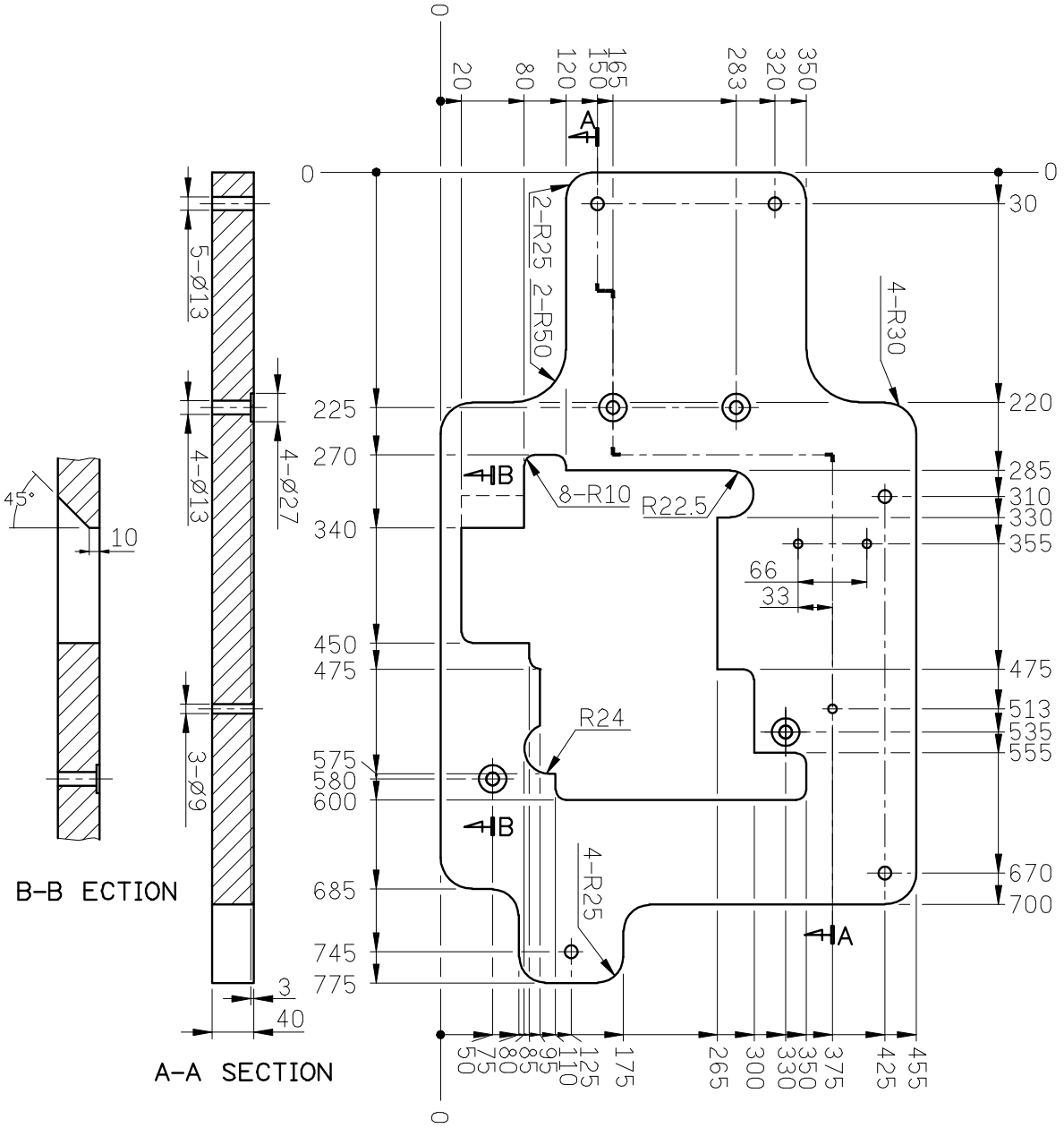

SiRUBA TABLE CUT - OUT	Series	Item Code	Subclass Remark	Mounting
	700K/988	700K-T		Non-submerged
				Date
				2012/11/18

單位/UNIT:mm
所有尺寸公差/TOLERANCE:±2
長度(L):1070/重量(W) :10.5kg±5%
長度(L):1200/重量(W) :11.5kg±5%

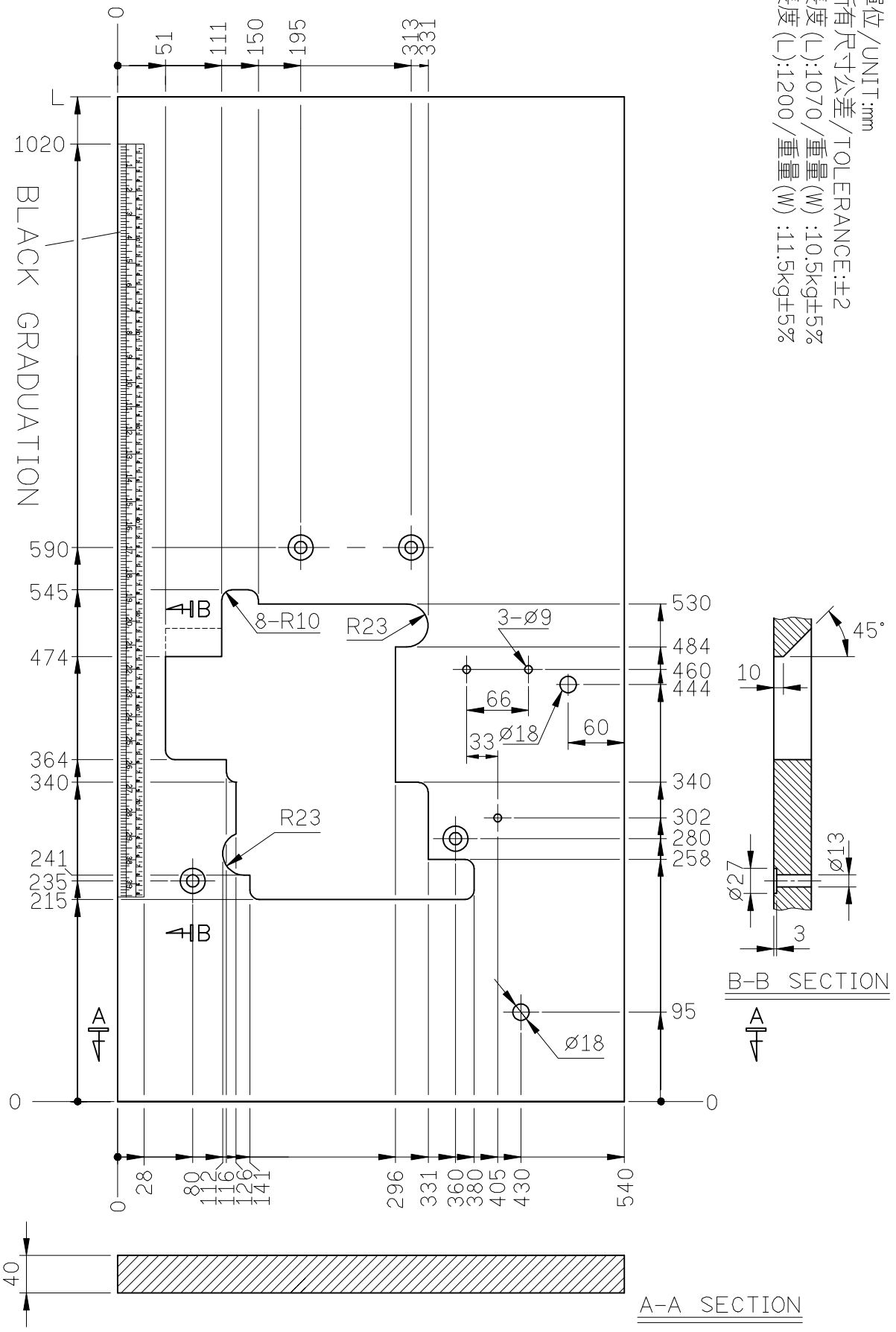

SIRUBA TABLE CUT - OUT	Series	Item Code	Subclass Remark	Mounting
	700K/988	700K-T1	需配TBK（包含TB202 / TB203 / TB204）(需搭 KX201 舊底盤)	Fully-submerged
				Date
				2012/11/18

單位/UNIT:mm
所有尺寸公差/TOLERANCE:±2
重量(W):12.4kg±5%

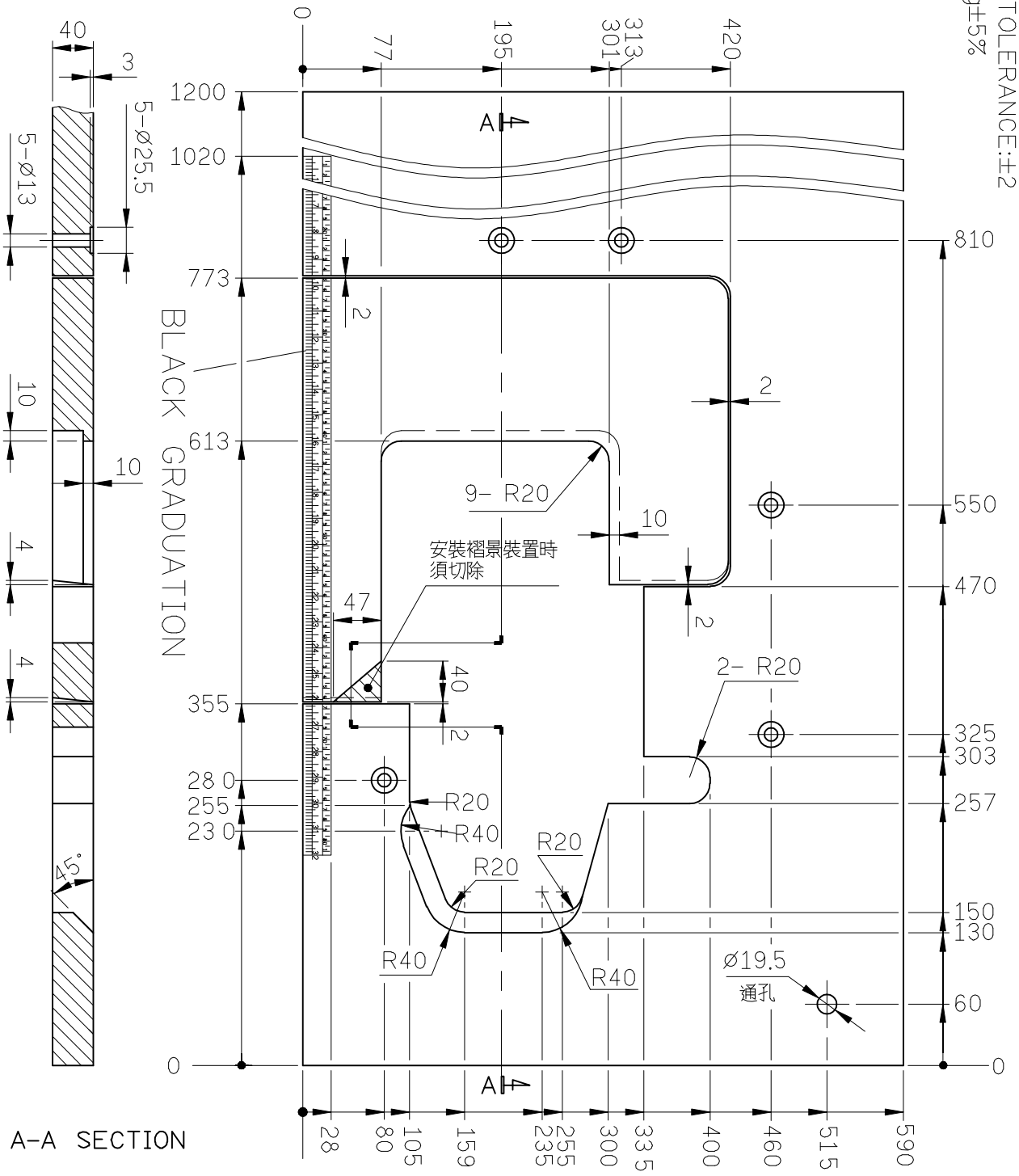

SiRUBA TABLE CUT - OUT	Series	Item Code	Subclass Remark	Mounting
	700K/988	700K-T2	需配TBK-1 (包含TB201) Collocate With TBK-1 (Including TB201)	Fully-submerged
				Date
				2012/12/22

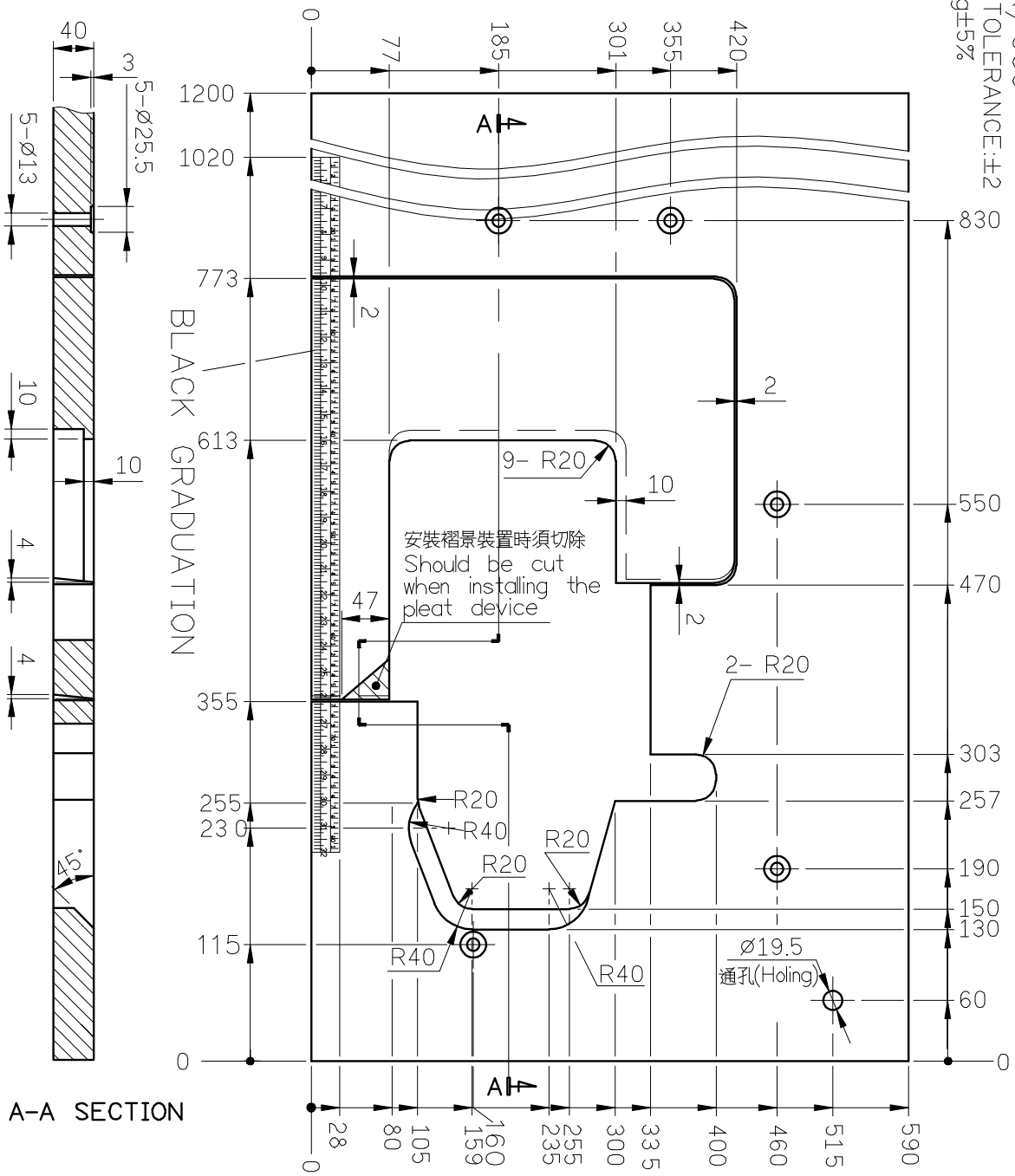

SiRUBA TABLE CUT - OUT	Series	Item Code	Subclass Remark	Mounting
	700K/988	700K-T3	For:EC、CT、VT 需配TBK-1（包含TB201) Collocate With TBK-1 (Including TB201)	Fully-submerged
				Date
				2012/12/22

單位/UNIT:mm
FOR 700K/988
所有尺寸公差/TOLERANCE:±2
重量(W):12.4kg±5%

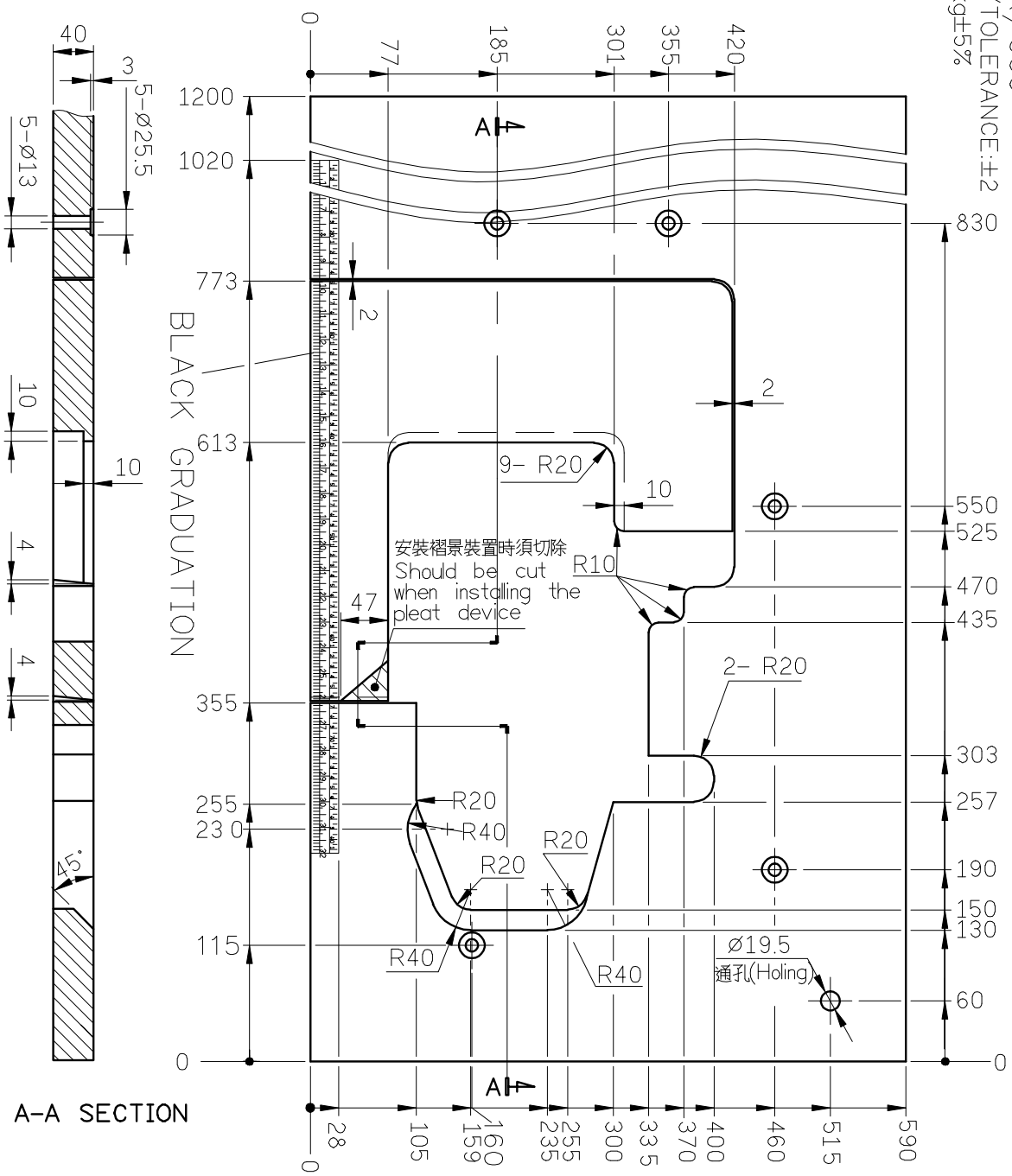

SiRUBA TABLE CUT - OUT	Series	Item Code	Subclass Remark	Mounting
	700KD/988D	700KD-T		Semi-submerged
				Date
				2012/11/18

單位/UNIT:mm
所有尺寸公差/TOLERANCE:±2
長度(L):1070/重量(W):10.3kg±5%
長度(L):1200/重量(W):11.3kg±5%

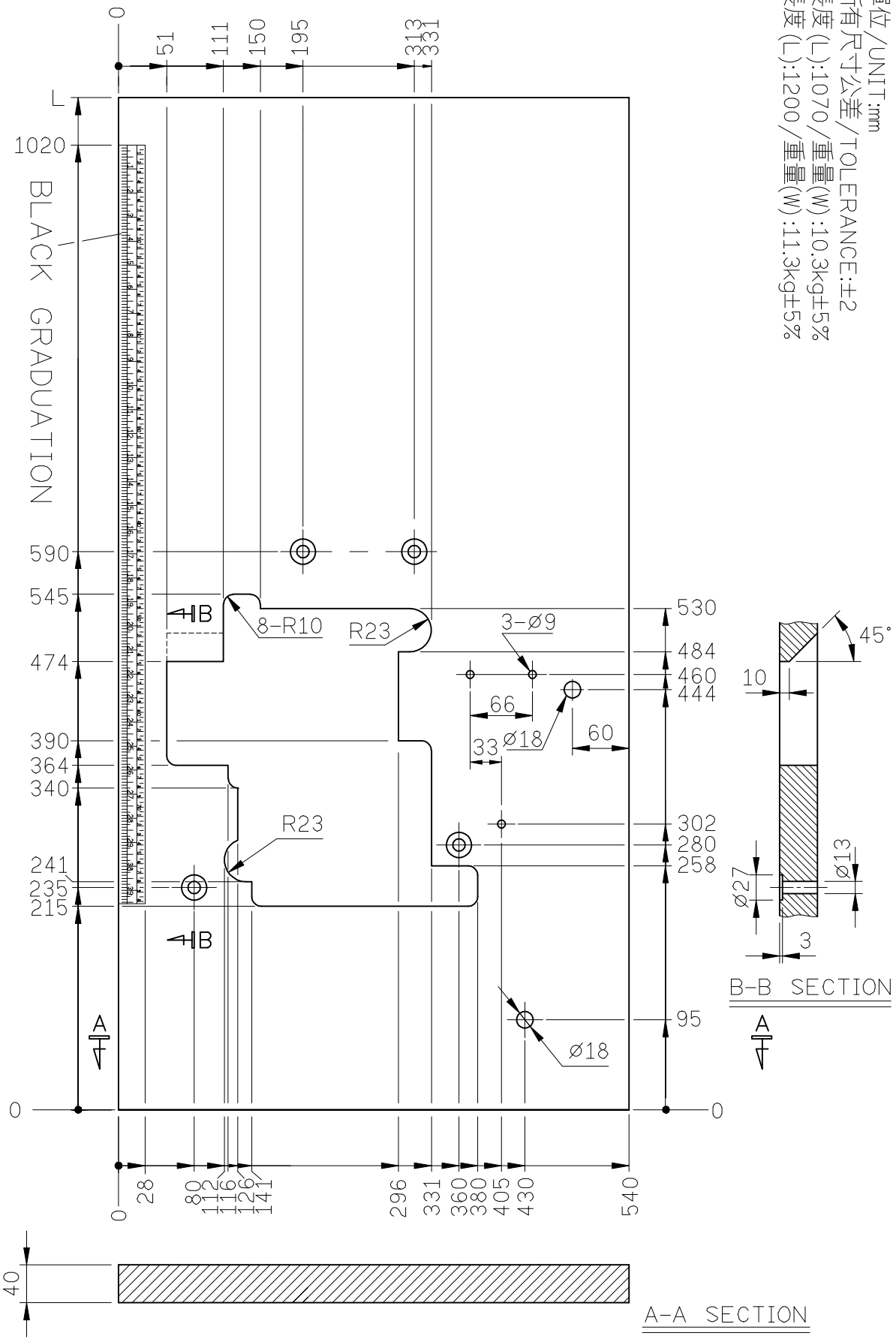

SiRUBA TABLE CUT - OUT	Series	Item Code	Subclass Remark	Mounting
	700KD/988D	700KD-T1	需配TBK(包含TB202/TB203) (需搭KX201舊底盤)	Fully-submerged
				Date
				2012/11/18

單位/UNIT:mm
所有尺寸公差/TOLERANCE:±2
重量(W):12.2kg±5%
其餘尺寸同700K-T1

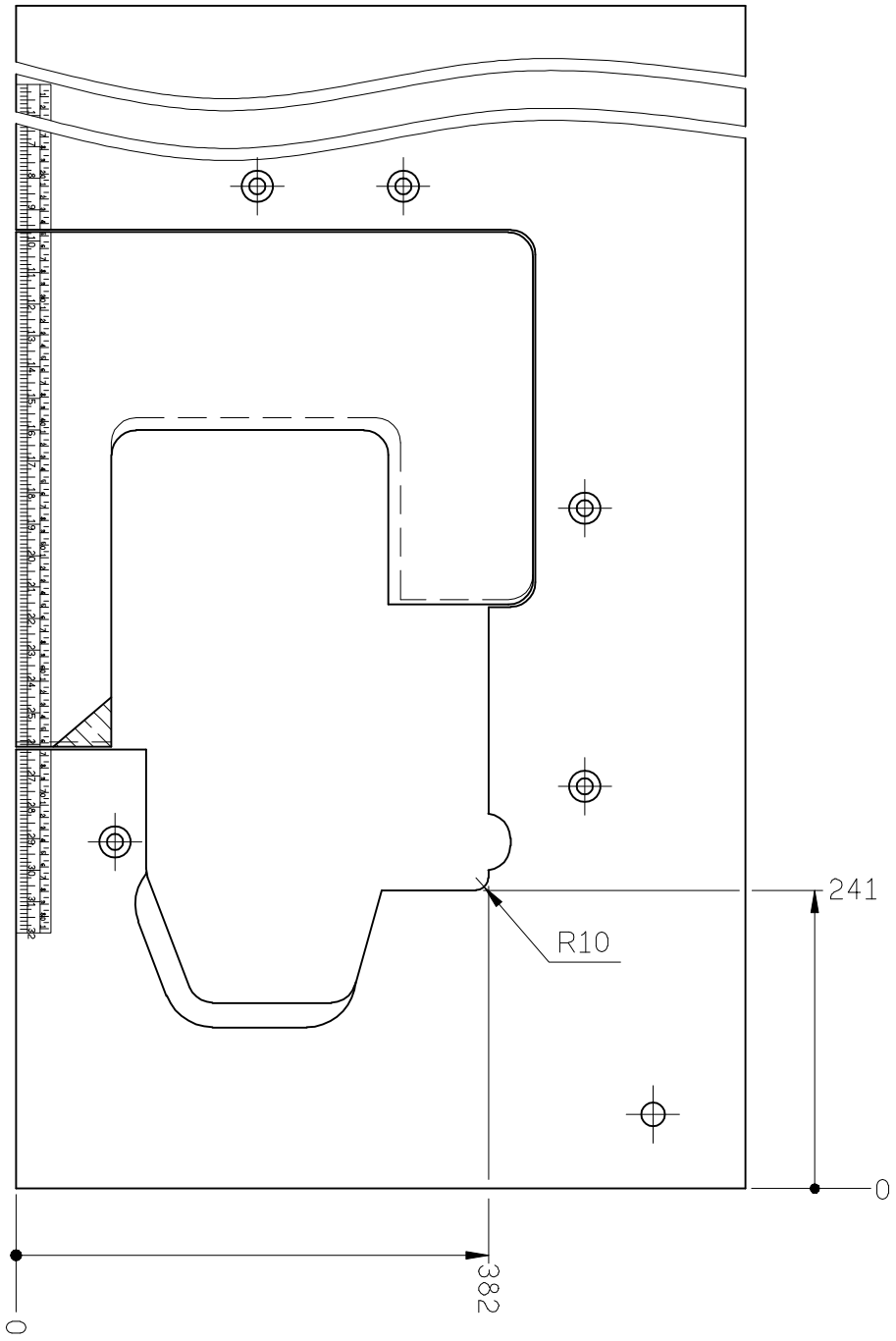

SiRUBA TABLE CUT - OUT	Series	Item Code	Subclass Remark	Mounting
	700KD/988D	700KD-T2	需配TBKD-1(包含TB201D)	Fully-submerged
				Date
				2012/11/18

單位/UNIT:mm
FOR 700KD/988D
所有尺寸公差/TOLERANCE:±2
重量(W):12.2kg±5%
其餘尺寸同700K-T2

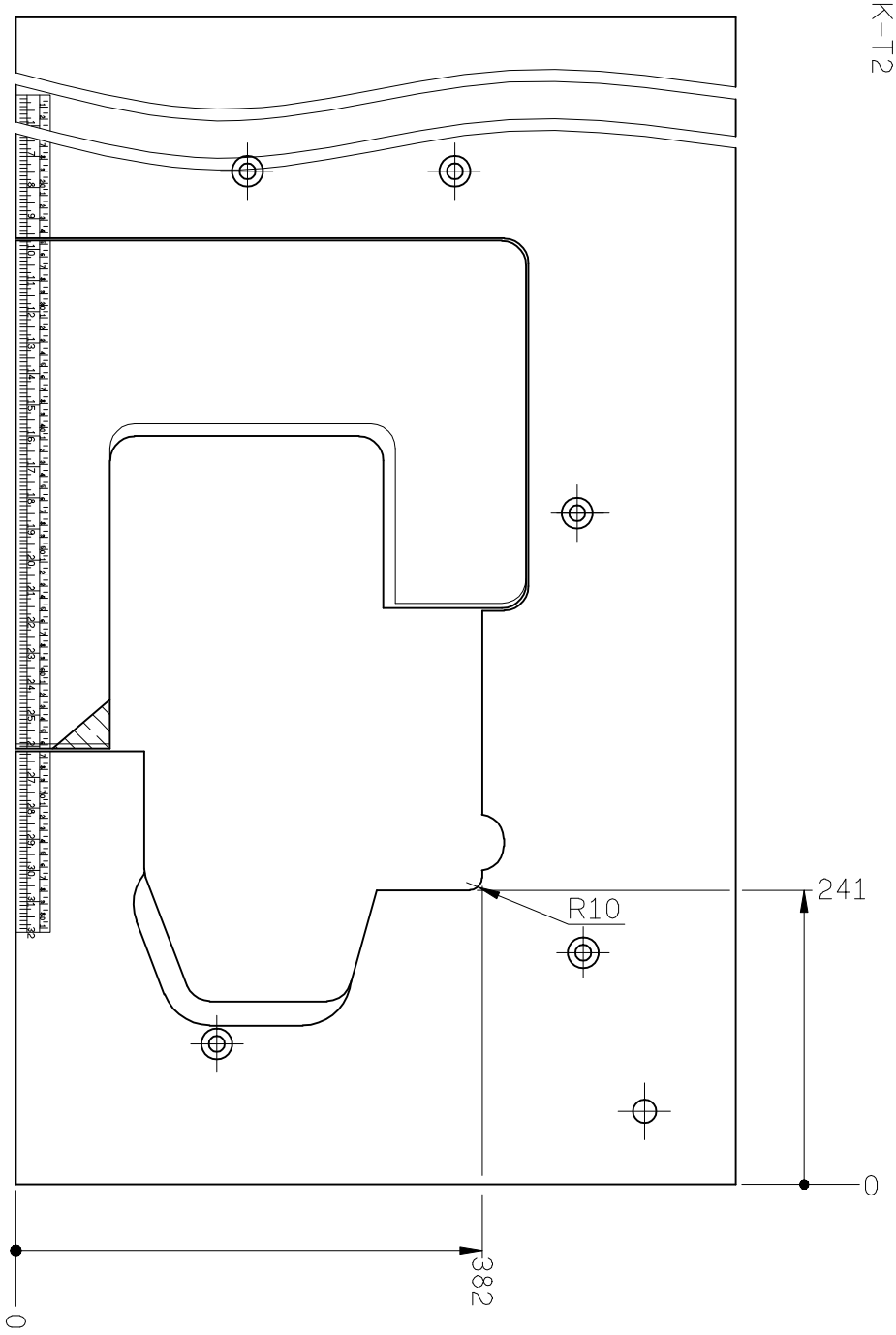

SiRUBA TABLE CUT - OUT	Series	Item Code	Subclass Remark	Mounting
	700KD/988D	700KD-T3	For：FLP、EC、CT、VT 需配TBKD-1(包含TB201D)	Fully-submerged
				Date
				2012/11/18
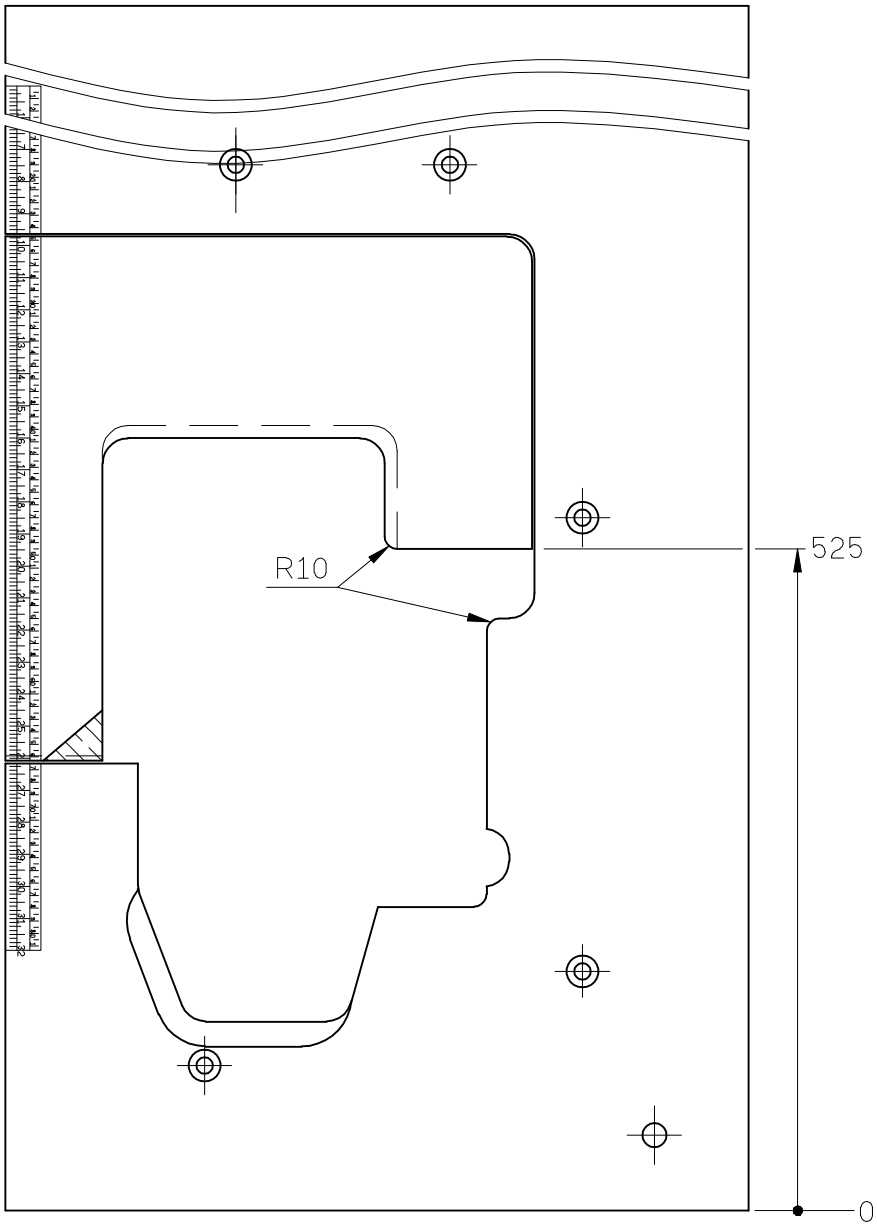
單位/UNIT:mm
FOR 700KD/988D
所有尺寸公差/TOLERANCE:±2
重量(W):11.9kg±5%
其餘尺寸同700KD-T2